rev.	revision text	rev.date	rev.by	apr. date	apr. by
02	modified tolerances	2023-03-19	Pechaub	2023-03-19	Kaufmd
03	general simplification	2023-12-16	Kaufmd	2023-12-16	Pechaub

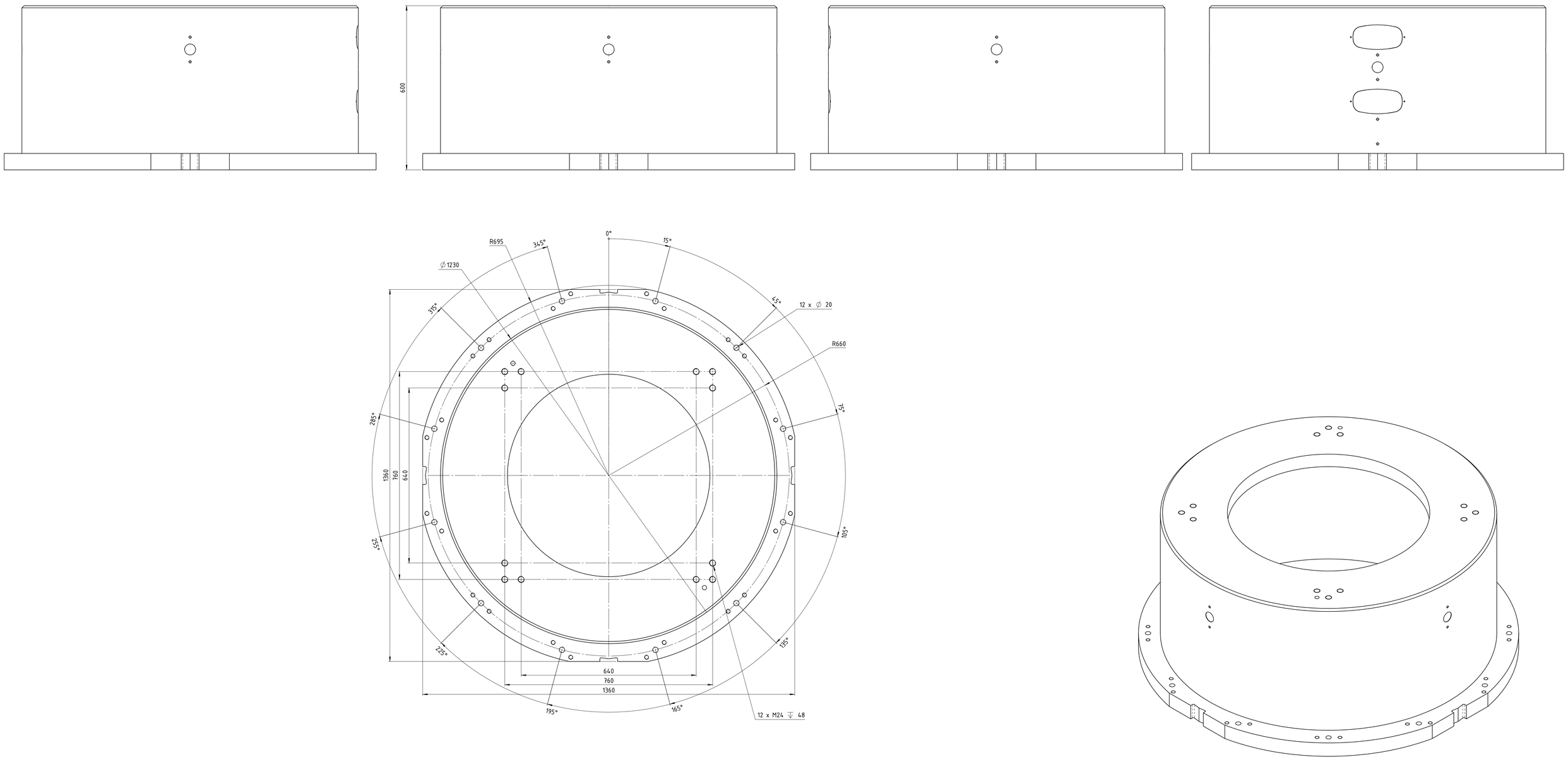

The reproduction, distribution and utilization of this document as well as the communication of its contents to others without express authorization is prohibited. Offenders will be held liable for the payment of damages. All rights reserved in the event of the grant of a patent, utility model or design

status: Released		YASKAWA www.yaskawa.eu.com	dimension:
SAP EMEA no:	SAP AM no: 222178		weight: 564.217 kg
			created: 2022-02-04 McNaeb
			drawn: 2022-02-04 McNaeb
			approved: 2022-02-07 AndLoes
			drawing-no.: 0000130145-100
			revision: 03
			sheet: A0
			1:5 4/5

where nothing else is indicated
tolerances: DIN ISO 2768-mH
welding: DIN EN ISO 13920-A
no sharp edges

title / description: robot stand T-600