YASKAWA

System SLIO

FM | 054-1DA00 | Manual

HB300 | FM | 054-1DA00 | en | 25-10

Motion Module - Pulse Train RS422 - FM 054

YASKAWA Europe GmbH
Philipp-Reis-Str. 6
65795 Hattersheim
Germany
Tel.: +49 6196 569-300
Fax: +49 6196 569-398
Email: info@yaskawa.eu
Internet: www.yaskawa.eu.com

054-1DA00_000_FM054 PulseTrain,10,EN - © 2025

Table of contents

1 General. . . . 6
1.1 About this manual. . . . 6
1.2 Copyright © YASKAWA Europe GmbH. . . . 7
1.3 Safety instructions. . . . 8
2 Basics and mounting. . . . 11
2.1 Safety notes for the user. . . . 11
2.2 System conception. . . . 12
2.2.1 Overview. . . . 12
2.2.2 Components. . . . 13
2.2.3 Accessories. . . . 16
2.2.4 Hardware revision. . . . 18
2.3 Dimensions. . . . 18
2.4 Grounding concept. . . . 21
2.4.1 Shielding. . . . 21
2.5 Mounting 8x periphery modules. . . . 23
2.6 Mounting 16x periphery modules. . . . 26
2.7 Wiring 8x periphery modules. . . . 29
2.8 Wiring 16x periphery modules. . . . 30
2.9 Wiring power modules. . . . 31
2.10 Demounting 8x periphery modules. . . . 35
2.11 Demounting 16x periphery modules. . . . 38
2.12 Easy Maintenance. . . . 41
2.13 Trouble shooting - LEDs. . . . 42
2.14 Industrial security and installation guidelines. . . . 43
2.14.1 Industrial security in information technology. . . . 43
2.14.2 Installation guidelines. . . . 45
2.15 General data for the System SLIO. . . . 47
2.15.1 Use in difficult operating conditions. . . . 49
3 Hardware description. . . . 50
3.1 Properties. . . . 50
3.2 Structure. . . . 51
3.3 Block diagram. . . . 54
3.4 Technical data. . . . 55
4 Deployment. . . . 59
4.1 Basics. . . . 59
4.1.1 Pulse train module. . . . 60
4.1.2 Structure of a positioning control. . . . 61

4.2 Commissioning. . . . 62
4.2.1 Installation. . . . 62
4.2.2 Inspections and tests before the test operation. . . . 62
4.2.3 Start-up of the System SLIO motion module. . . . 62
4.3 Connecting a power stage. . . . 64
4.3.1 Connection options. . . . 64
4.4 Drive profile. . . . 66
4.4.1 Overview. . . . 66
4.4.2 States. . . . 67
4.4.3 Operating modes. . . . 68
4.5 Homing. . . . 69
4.5.1 Homing by means of a homing switch. . . . 70
4.5.2 Homing to actual position. . . . 72
4.6 PtP positioning profile. . . . 73
4.6.1 Examples. . . . 77
4.7 Velocity profile. . . . 83
4.8 Deployment I/O1...I/O4. . . . 86
4.8.1 Objects. . . . 87
4.8.2 Usage as input for incremental encoder. . . . 87
4.9 Brake control. . . . 89
4.10 In-/Output area. . . . 90
4.11 Acyclic channel. . . . 92
4.12 Parameter data. . . . 94
4.13 Scaling and units. . . . 95
4.14 Monitoring and error reaction. . . . 95
4.14.1 Overview. . . . 95
4.14.2 Monitoring. . . . 96
4.15 Diagnostics and interrupt. . . . 98
4.16 Example: 054-1DA00 with YASKAWA Sigma 5 mini. . . . 100
4.16.1 Job definition. . . . 100
4.16.2 Wiring. . . . 100
4.16.3 Commissioning of the power stage. . . . 101
4.16.4 Configuration of the System SLIO motion module. . . . 103
4.16.5 Setting of the objects. . . . 104
4.16.6 Test operation. . . . 105
5 Object dictionary. . . . 106
5.1 Use. . . . 106
5.2 Objects. . . . 107
5.2.1 Overview. . . . 107
5.2.2 Information about the product - 0x1000...0x1018. . . . 110
5.2.3 Passwords and security - 0x1100. . . . 111
5.2.4 System command - 0x6100. . . . 112

5.2.5 Digital inputs I/O1...I/O4 - 0x7100. 112
5.2.6 Digital output I/O1...I/O4 - 0x7200. 114
5.2.7 Control drive - 0x8100. 116
5.2.8 Configure drive - 0x8180. 122
5.2.9 Options - 0x8200. 123
5.2.10 Operating modes - 0x8280. 124
5.2.11 Homing - 0x8300. 125
5.2.12 Parameter for the PtP positioning profile - 0x8400. 128
5.2.13 Positions and limit values - 0x8480. 130
5.2.14 Velocities and limit values - 0x8500. 132
5.2.15 Acceleration and deceleration - 0x8580. 133
5.2.16 Voltages - 0x8680. 134
5.2.17 Temperatures - 0x8780. 137
5.2.18 Pulse train parameter - 0x8E00. 138
5.2.19 Encoder resolution - 0x8F00. 142

1 General

1.1 About this manual

Objective and contents

This manual describes the FM 054-1DA00 of the System SLIO.

- It describes the structure, configuration and application.
- The manual is targeted at users with good basic knowledge in automation technology.
- The manual does not replace sufficient basic knowledge of automation technology or sufficient familiarity with the specific product.
- The manual consists of chapters. Each chapter describes a completed topic.
- For guidance, the manual provides:
  - An overall table of contents at the beginning of the manual
  - References with pages numbers

    To be able to return to the previous view from a reference in the PDF, you should activate the page navigation in your PDF viewer.

Validity of the documentation

Product	Order no.	as of version:	
FM 054 Pulse Train	054-1DA00	HW: 01	FW: V1.0.9

Documentation

In the context of the use of the pertinent Yaskawa product, the manual is to be made accessible to the pertinent qualified personnel in:

- Project engineering
- Installation department
- Commissioning
- Operation

Icons and headings

Important passages in the text are highlighted by following icons and headings:

DANGER

- Immediate danger to life and limb of personnel and others.
- Non-compliance will cause death or serious injury.

CAUTION

- Hazardous situation to life and limb of personnel and others. Non-compliance may cause slight injuries.
- This symbol is also used as warning of damages to property.

NOTICE

- Designates a possibly harmful situation.
- Non-compliance can damage the product or something in its environment.

Supplementary information and useful tips.

1.2 Copyright © YASKAWA Europe GmbH

All rights reserved

This document contains protected information of Yaskawa and may not be disclosed or used outside of an agreement made in advance with Yaskawa and only in accordance with that agreement.

This document is protected by copyright laws. Reproduction, distribution, or modification of this document or excerpts thereof is not permitted without the written consent of Yaskawa and the owner of this document, except in accordance with applicable agreements, contracts or licenses.

For permission to reproduce or distribute, please contact: YASKAWA Europe GmbH, European Headquarters, Philipp-Reis-Str. 6, 65795 Hattersheim, Germany

Tel.: +49 6196 569 300
Fax.: +49 6196 569 398
E-mail: info@yaskawa.eu
Internet: www.yaskawa.eu.com

Download Center

By entering the product order number in the *'Download Center'* at www.yaskawa.eu.com, the pertinent manuals, data sheets, declarations of conformity, certificates and other helpful information for your product can be found.

Trademarks

SLIO and SPEED7 are registered trademarks of YASKAWA Europe GmbH.

CAN is a registered trademark of CAN in Automation e. V. (CiA).

EtherCAT® is a registered trademark and patented technology, licensed by Beckhoff Automation GmbH, Germany.

PROFINET and PROFIBUS are registered trademarks of PROFIBUS and PROFINET International (PI).

SIMATIC is a registered trademark of Siemens AG.

All other trademarks, logos and service or product marks specified herein are owned by their respective companies.

General terms of use

Every effort was made by Yaskawa to ensure that the information contained in this document was complete and correct at the time of publication. Nevertheless, the information contained therein is only owed by Yaskawa as it is available at Yaskawa. Correctness is not assured by Yaskawa, the right to change the information contained herein is always reserved by Yaskawa. There is no obligation to inform the customer of any changes. The customer is requested to actively keep this documentation up to date. The use of the products covered by these instructions, together with the associated documentation, is always at the customer's own risk, in accordance with the applicable guidelines and standards. This documentation describes the hardware and software components and functions of the product. It is possible that units are described which the customer does not have. The exact scope of delivery is described in the respective purchase contract.

Terminology *'Master'* and *'Slave'* as technical terms

The terms *'Master'* and *'Slave'* were established in many technical areas decades ago and are used in a clearly defined way, which is independent of their historical meaning.

In this manual, the terms *'Master'* and *'Slave'* are used in a purely functional and non-judgemental way. These terms are well established in numerous international regulations, standards and documentations. Switching to alternative terms could lead to misunderstandings and ambiguities in application.

We continue to use the terms *'Master'* and *'Slave'*, but are aware of their origins and are committed to reflective, non-discriminatory communication.

Document support

Contact your local representative of YASKAWA Europe GmbH if you have errors or questions regarding the content of this document. You can reach YASKAWA Europe GmbH via the following contact:

Email: Documentation.HER@yaskawa.eu

Technical support

Contact your local representative of YASKAWA Europe GmbH if you encounter problems or have questions regarding the product. If such a location is not available, you can reach the Yaskawa customer service via the following contact:

YASKAWA Europe GmbH,
European Headquarters, Philipp-Reis-Str. 6, 65795 Hattersheim, Germany
Tel.: +49 6196 569 500 (hotline)
Email: support@yaskawa.eu

1.3 Safety instructions

General safety instructions

DANGER

Danger to life due to non-compliance with safety instructions

Non-compliance with the safety instructions in the manual can result in serious injury or death. The manufacturer is not responsible for any injuries or damage to the equipment.

CAUTION

Before commissioning and operating the components described in this manual, it is essential to note the following:

- Modifications to the automation system must only be done in a voltage-free state!
- Connection and modification only by trained electricians
- National regulations and guidelines in the respective country of use must be observed and complied with (installation, protective measures, EMC, etc.)

Intended use

- It is the customer's responsibility to comply with all pertinent standards, codes, or regulations applicable to the use of the product, including those that apply when the Yaskawa product is used in combination with other products.
- The customer must confirm that the Yaskawa product is suitable for the customer's plant, machinery and equipment.
- If the Yaskawa product is used in a manner not specified by this manual, the protection provided by the Yaskawa product may be impaired and the use may result in material or immaterial damage.
- Contact Yaskawa to determine whether use is permitted in the following applications. If the use in the respective application is permissible, the Yaskawa product is to be used by considering additional risk assessments and specifications, and safety measures are to be provided to minimise the dangers in the event of a fault. Special caution is required and protective measures must be taken in the case of:
  - Outdoor use, use with possible chemical contamination or electrical interference, or use under conditions or in environments which are not described in product catalogs or manuals
  - Nuclear control systems, combustion systems, railway systems, aviation systems, automotive systems, medical devices, amusement machines and equipment that is specifically regulated by industry or government
  - Systems, machines and devices that can pose a risk to life or property
  - Systems that require a high degree of reliability, such as gas, water or electricity supply systems or systems that operate 24 hours a day
  - Other systems that require a similarly high level of security
- Never use the Yaskawa product in an application where failure of the product could cause serious danger to life, limb, health or property without first ensuring that the system is designed to provide the required level of safety with risk warnings and redundancy to avoid the realisation of such dangers and that the Yaskawa product is properly designed and installed.
- The connection examples and other application examples described in the product catalogs and manuals of Yaskawa are for reference purposes. Check the functionality and safety of the devices and systems actually to be used before using the Yaskawa product.
- To avoid accidental harm to third parties, read and understand all prohibitions on use and precautions, and operate the Yaskawa product correctly.

Field of application

- The Yaskawa product is not suited for use in life-support machines or systems.
- Please contact your Yaskawa representative or Yaskawa distributor if considering the use of the Yaskawa product for special purposes, such as machines or systems used in passenger cars, in medical, aircraft and aerospace applications, for power supply of networks, for electrical power distribution or for underwater applications.

DANGER

The device is not permitted for use

– in explosive environments (EX zone)

The system is designed and manufactured for proper use and use in accordance with the user manual and is designed for:

- Communication and process control
- general control and automation tasks
- for industrial use
- operation within the environmental conditions specified in the technical data
- installation in a cabinet

DANGER

If this Yaskawa product is used in applications where failure of the device can result in the loss of human life, a serious accident or physical injury, you must install appropriate safety devices.

– Death or serious injury can result if you do not install the safety devices properly.

Disclaimer

(1) The contractual and legal liability of Yaskawa and the legal representatives and vicarious agents of Yaskawa for compensation and reimbursement of expenses in relation to the content of this documentation is excluded or limited as follows:

a) For slightly negligent breaches of *Essential Contractual Duties* arising from the contractual obligation, for Yaskawa the amount of liability is limited to the foreseeable damage typical for the contract. *'Essential Contractual Duties'* are those duties that characterise the performance of the contract and on which the Yaskawa customer may reasonably rely.

(b) In each case, Yaskawa is not liable for (i) the slightly negligent breach of duties arising from the duties that are not *Essential Contractual Duties*, as well as (ii) force majeure, i.e. external events that have no operational connection and cannot be averted even by exercising the utmost care that can reasonably be expected.

(2) The aforementioned limitation of liability does not apply (i) in cases of mandatory statutory liability (in particular under the product liability law), (ii) if and to the extent that Yaskawa has assumed a guarantee or same as guaranteed procurement risk according to § 276 BGB, (iii) for culpably caused injuries to life, limb and/or health, also by representatives or vicarious agents, as well as (iv) in case of delay in the event of a fixed completion date.

(3) A reversal of the burden of proof is not associated with the provisions above.

Disposal

National rules and regulations apply to the disposal of the unit!

2 Basics and mounting

2.1 Safety notes for the user

DANGER

Protection against dangerous voltages

- When using System SLIO modules, the user must be protected from touching hazardous voltage.
- You must therefore create an insulation concept for your system that includes safe separation of the potential areas of extra-low voltage (ELV) and hazardous voltage.
- Here, observe the insulation voltages between the potential areas specified for the System SLIO modules and take suitable measures, such as using PELV/SELV power supplies for System SLIO modules.

Handling of electrostatic sensitive modules

The modules are equipped with highly integrated components in MOS technology. These components are highly sensitive to over-voltages that occur, e.g. with electrostatic discharge. The following symbol is used to identify these hazardous modules:

The symbol is located on modules, module racks or on packaging and thus indicates electrostatic sensitive modules. Electrostatic sensitive modules can be destroyed by energies and voltages that are far below the limits of human perception. If a person who is not electrically discharged handles electrostatic sensitive modules, voltages can occur and damage components and thus impair the functionality of the modules or render the modules unusable. Modules damaged in this way are in most cases not immediately recognized as faulty. The error can only appear after a long period of operation. Components damaged by static discharge can show temporary faults when exposed to temperature changes, vibrations or load changes. Only the consistent use of protective devices and responsible observance of the handling rules can effectively prevent malfunctions and failures on electrostatic sensitive modules.

Shipping of modules

Please always use the original packaging for shipping.

Measurement and modification of electrostatic sensitive modules

For measurements on electrostatic sensitive modules the following must be observed:

- Floating measuring instruments must be discharged before use.
- Measuring instruments used must be grounded.

When modifying electrostatic sensitive modules, ensure that a grounded soldering iron is used.

CAUTION

When working with and on electrostatic sensitive modules, make sure that personnel and equipment are adequately grounded.

2.2 System conception

2.2.1 Overview

The System SLIO is a modular automation system for assembly on a 35mm profile rail. By means of the periphery modules with 2, 4, 8 and 16 channels this system may properly be adapted matching to your automation tasks. The wiring complexity is low, because the supply of the DC 24V power section supply is integrated to the backplane bus and defective modules may be replaced with standing wiring. By deployment of the power modules in contrasting colors within the system, further isolated areas may be defined for the DC 24V power section supply, respectively the electronic power supply may be extended with 2A.

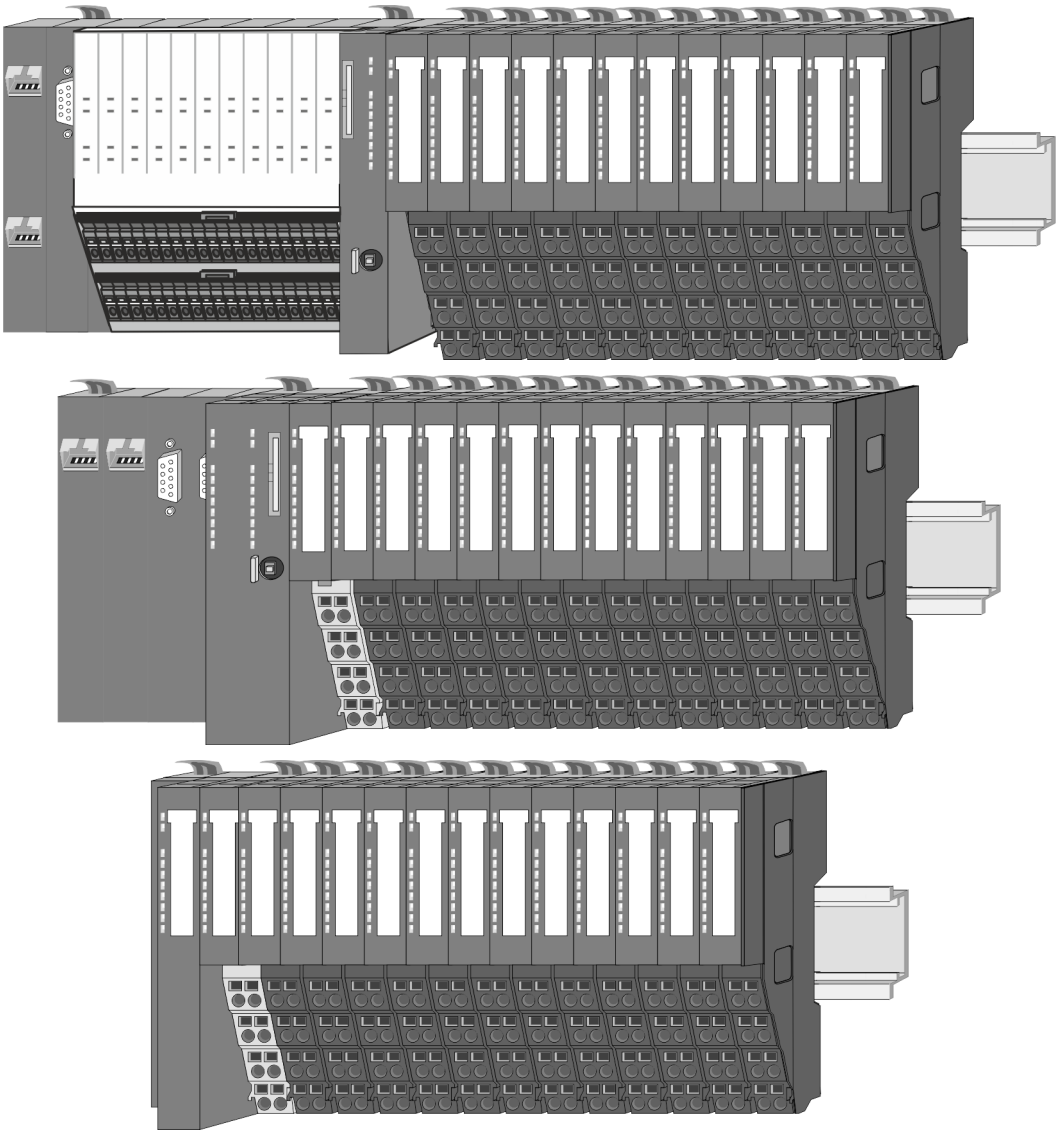

2.2.2 Components

- CPU (head module)
- Bus coupler (head module)
- Line extension
- 8x periphery modules
- 16x periphery modules
- Power modules
- Accessories

CAUTION

Only Yaskawa modules may be combined. A mixed operation with third-party modules is not allowed!

CPU 01xC

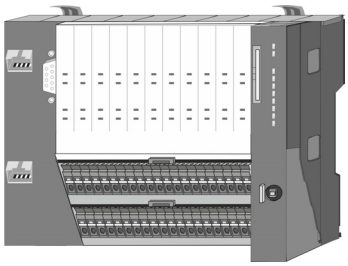

With the CPU 01xC electronic, input/output components and power supply are integrated to one casing. In addition, up to 64 periphery modules of the System SLIO can be connected to the backplane bus. As head module via the integrated power module for power supply CPU electronic and the I/O components are supplied as well as the electronic of the periphery modules, which are connected via backplane bus. To connect the power supply of the I/O components and for DC 24V power section supply of via backplane bus connected periphery modules, the CPU has removable connectors. By installing of up to 64 periphery modules at the backplane bus, these are electrically connected, this means these are assigned to the backplane bus, the electronic modules are power supplied and each periphery module is connected to the DC 24V power section supply.

CPU 01x

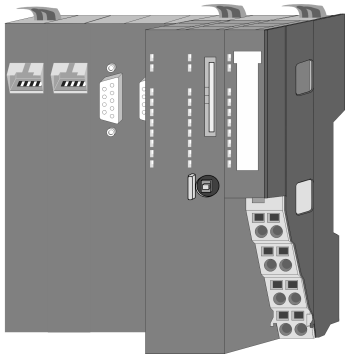

With this CPU 01x, CPU electronic and power supply are integrated to one casing. As head module, via the integrated power module for power supply, CPU electronic and the electronic of the connected periphery modules are supplied. The DC 24V power section supply for the linked periphery modules is established via a further connection of the power module. By installing of up to 64 periphery modules at the backplane bus, these are electrically connected, this means these are assigned to the backplane bus, the electronic modules are power supplied and each periphery module is connected to the DC 24V power section supply.

CAUTION

CPU part and power module may not be separated!

Here you may only exchange the electronic module!

Bus coupler

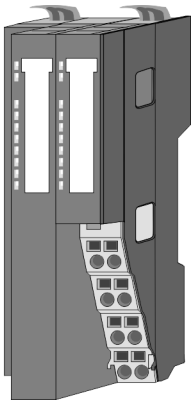

With a bus coupler bus interface and power module is integrated to one casing. With the bus interface you get access to a subordinated bus system. As head module, via the integrated power module for power supply, bus interface and the electronic of the connected periphery modules are supplied. The DC 24V power section supply for the linked periphery modules is established via a further connection of the power module. By installing of up to 64 periphery modules at the bus coupler, these are electrically connected, this means these are assigned to the backplane bus, the electronic modules are power supplied and each periphery module is connected to the DC 24V power section supply.

CAUTION

Bus interface and power module may not be separated!

Here you may only exchange the electronic module!

Line extension

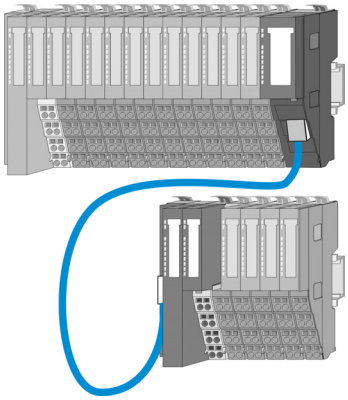

In the System SLIO there is the possibility to place up to 64 modules in on line. By means of the line extension you can divide this line into several lines. Here you have to place a line extension MainDevice at each end of a line and the subsequent line has to start with a line extension SubDevice. MainDevice and SubDevice are to be connected via a special connecting cable. In this way, you can divide a line on up to 5 lines. Depending on the line extension, the max. number of pluggable modules at the System SLIO bus is decreased accordingly. To use the line extension no special configuration is required.

Please note that some modules do not support line extensions due to the system. For more information, please refer to the compatibility list. This can be found in the 'Download Center' of www.yaskawa.eu.com under 'System SLIO Compatibility list'.

Periphery modules

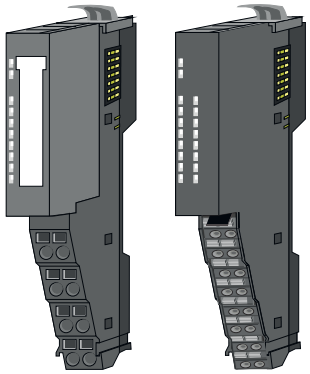

The periphery modules are available in the following 2 versions, whereby of each the electronic part can be replaced with standing wiring:

- 8x periphery module for a maximum of 8 channels.
- 16x periphery module for a maximum of 16 channels.

8x periphery modules

Each 8x periphery module consists of a *terminal* and an *electronic module*.

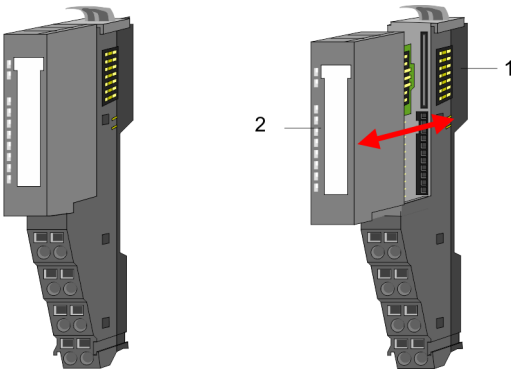

1 Terminal module
2 Electronic module

Terminal module

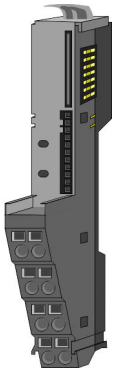

The *terminal* module serves to carry the electronic module, contains the backplane bus with power supply for the electronic, the DC 24V power section supply and the staircase-shaped terminal for wiring. Additionally the terminal module has a locking system for fixing at a profile rail. By means of this locking system your system may be assembled outside of your switchgear cabinet to be later mounted there as whole system.

Electronic module

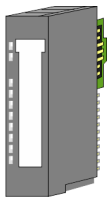

The functionality of a periphery module is defined by the *electronic module*, which is mounted to the terminal module by a sliding mechanism. With an error the defective electronic module may be exchanged for a functional module with standing installation. At the front side there are LEDs for status indication. For simple wiring each module shows corresponding connection information at the front and at the side.

16x periphery modules

Each 16x periphery module consists of an *electronic unit* and a *terminal block*.

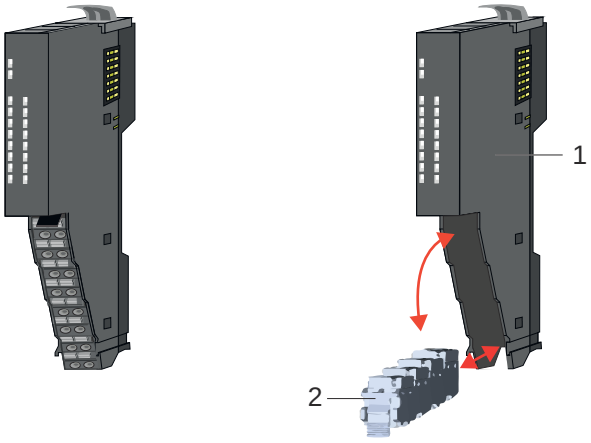

1 Electronic unit
2 Terminal block

Electronic unit

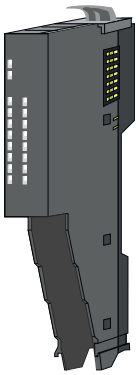

With the 16x periphery module the terminal block is connected to the *electronic unit* via a secure flap mechanism. In the case of an error you can exchange the defective electronic unit for a functional unit with standing wiring. At the front side there are LEDs for status indication. For easy wiring each electronic unit shows corresponding connection information at the side. The electronic unit provides the slot for the terminal block for the wiring and contains the backplane bus with power supply for the electronic and the connection to the DC 24V power section supply. Additionally the electronic unit has a locking system for fixing it at a profile rail. By means of this locking system your system may be assembled outside of your switchgear cabinet to be later mounted there as whole system.

Terminal block

The *terminal block* provides the electrical interface for the signalling and supplies lines of the module. When mounting the terminal block, it is attached to the bottom of the electronic unit and turned towards the electronic unit until it clicks into place. With the wiring a "push-in" spring-clip technique is used. This allows a quick and easy connection of your signal and supply lines. The clamping off takes place by means of a screwdriver.

Power module

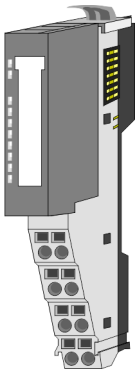

In the System SLIO the power supply is established by power modules. These are either integrated to the head module or may be installed between the periphery modules. Depending on the power module isolated areas of the DC 24V power section supply may be defined respectively the electronic power supply may be extended with 2A. For better recognition the colour of the power modules are contrasting to the periphery modules.

2.2.3 Accessories

Profile rail

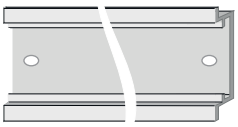

Order no.	Description
290-1AF00	35 mm profile rail length 2000mm
290-1AF30	35 mm profile rail length 530mm

NOTICE

To ensure EMC, the profile rail must be grounded!

- Ensure that the profile rail is reliably and professionally grounded.
- By mounting them on the grounded profile rail, the modules are automatically connected to the grounding system.

'Grounding guidelines'...page 21

'Installation guidelines'...page 45

Shield bus carrier

Please note that a shield bus carrier cannot be mounted on a 16x periphery module!

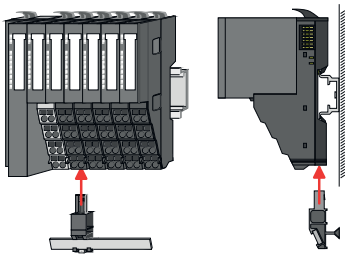

The shield bus carrier (order no.: 000-0AB00) serves to carry the shield bus (10mm x 3mm) to connect cable shields. Shield bus carriers, shield bus and shield fixings are not in the scope of delivery. They are only available as accessories. The shield bus carrier is mounted underneath the terminal of the terminal module. With a flat profile rail for adaptation to a flat profile rail you may remove the spacer of the shield bus carrier.

Bus cover

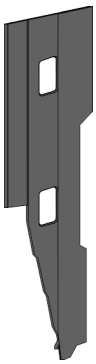

With each head module, to protect the backplane bus connectors, there is a mounted bus cover in the scope of delivery. You have to remove the bus cover of the head module before mounting a System SLIO module. For the protection of the backplane bus connector you always have to mount the bus cover at the last module of your system again. The bus cover has the order no. 000-0AA00.

Coding pins

Please note that a coding pin cannot be installed on a 16x periphery module! Here you have to make sure that the associated terminal block is plugged again when the electronics unit is replaced.

There is the possibility to fix the assignment of electronic and terminal module. Here coding pins (order number 000-0AC00) can be used. The coding pin consists of a coding jack and a coding plug. By combining electronic and terminal module with coding pin, the coding jack remains in the electronic module and the coding plug in the terminal module. This ensures that after replacing the electronic module just another electronic module can be plugged with the same encoding.

Spare parts

The following spare parts are available for the System SLIO:

Spare part	Order no.	Description	Packaging unit
	092-9BH00	Terminal block for System SLIO 16x periphery module.	5 pieces
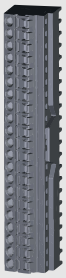	092-9BK00	Connector for System SLIO CPU 013C.	5 pieces

CAUTION

Please note that you may only use the spare parts with Yaskawa modules. Use with third-party modules is not allowed!

2.2.4 Hardware revision

Hardware revision on the front

- The hardware revision is printed on every System SLIO module.
- Since a System SLIO 8x periphery module consists of a terminal and electronic module, you will find a hardware revision printed on each of them.
- Authoritative for the hardware revision of a System SLIO module is the hardware revision of the electronic module. This is located under the labeling strip of the corresponding electronic module.
- Depending on the module type, there are the following 2 variants e.g. to indicate hardware revision 1:
  - With current labelling there is a 1 on the front.
  - With earlier labelling, the 1 is marked with *'X'* on a number grid.

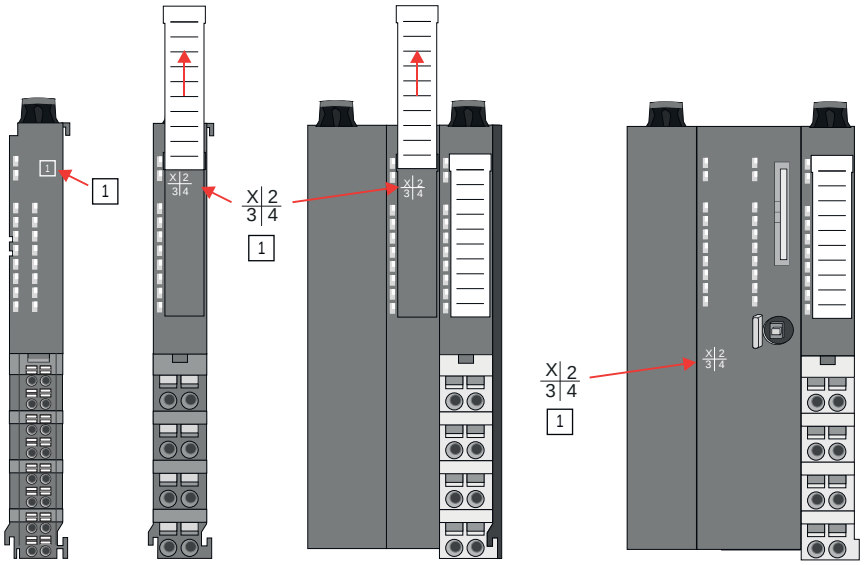

Hardware revision via web server

On the CPUs and some bus couplers, you can check the hardware revision *'HW Revision'* via the integrated web server.

2.3 Dimensions

CPU 01xC

All dimensions are in mm.

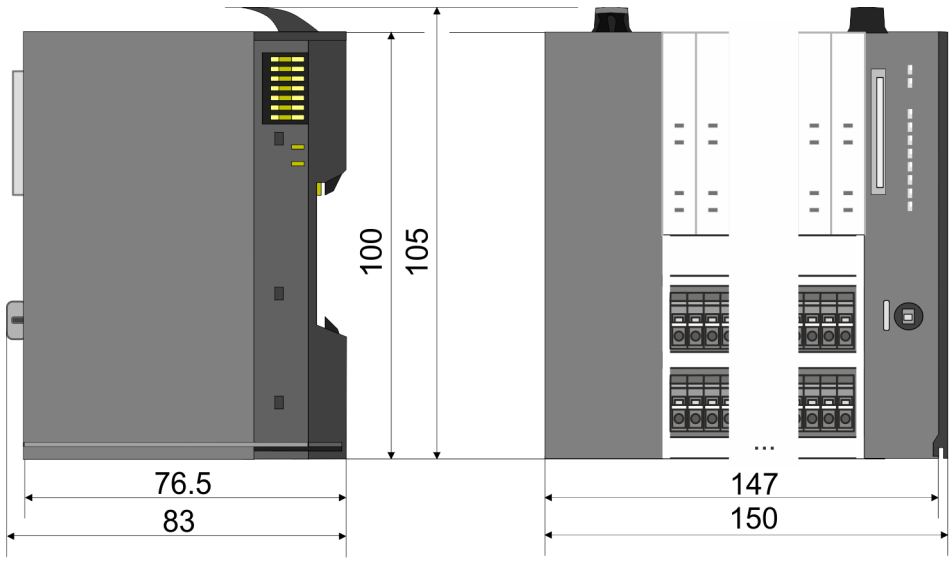

CPU 01x

Bus coupler and line extension SubDevice

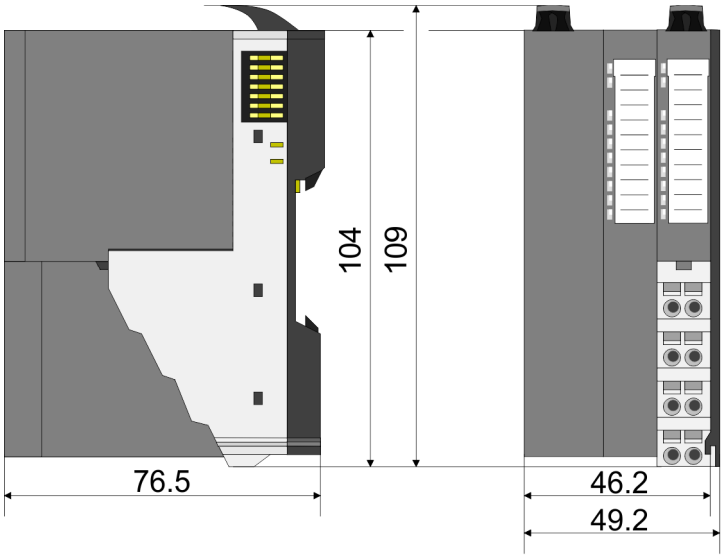

Line extension MainDevice

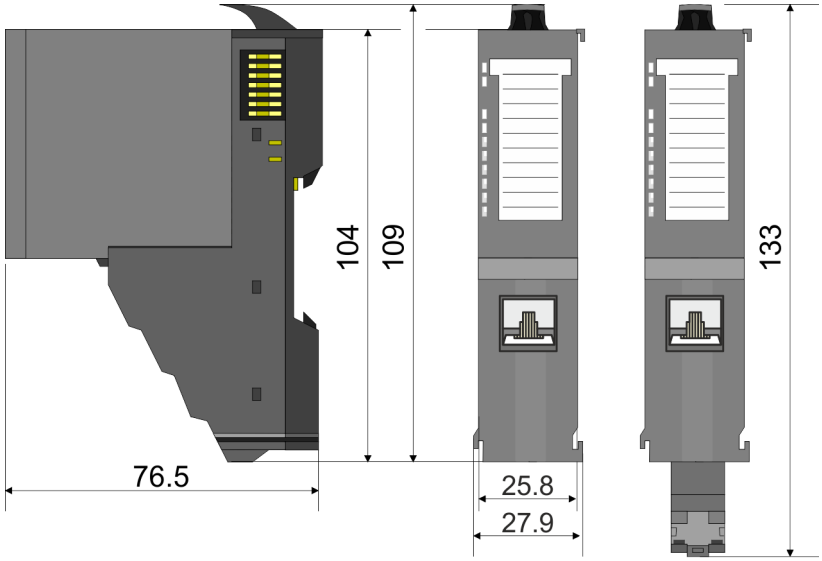

Dimensions

8x periphery module

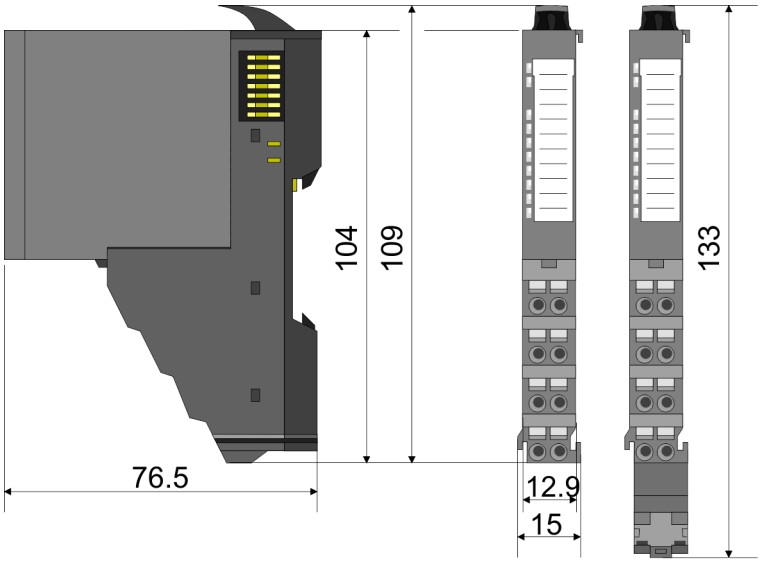

Electronic module

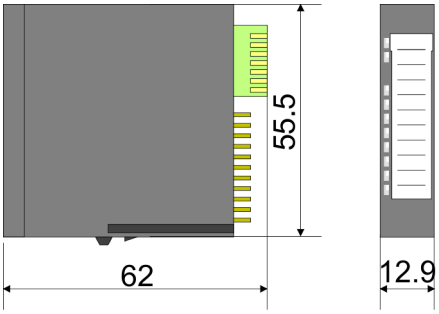

16x periphery module

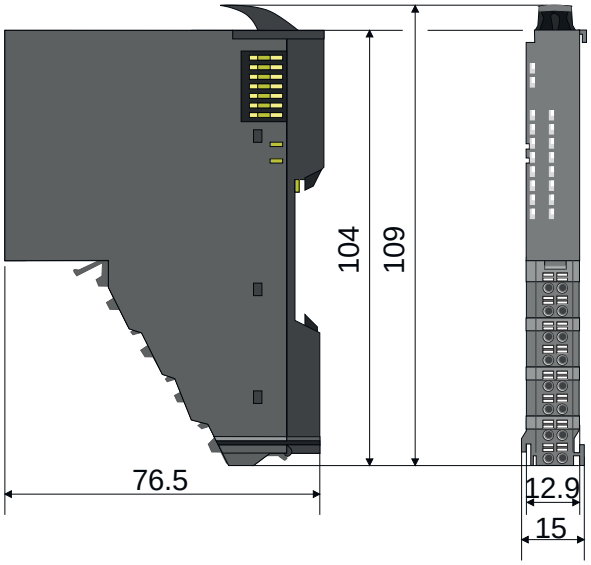

2.4 Grounding concept

Grounding guidelines

For reliable grounding, ensure that all common ground connections and the functional earth (FE) of your System SLIO and all connected devices are connected to a central point and grounded there.

NOTICE

To ensure EMC, the profile rail must be grounded!

- Ensure that the profile rail is reliably and professionally grounded.
- By mounting them on the grounded profile rail, the modules are automatically connected to the grounding system.

'Installation guidelines'...page 45

- To avoid potential differences, use grounding cables that are as short as possible and have a large cross-section.
- When selecting grounding points, observe the applicable safety regulations.
- When assembling your components, ensure that the inactive metal parts are properly grounded over a large area.
  - Connect all inactive metal parts over a large area and with low impedance.
  - Avoid using aluminium parts if possible. Aluminium is easily oxidizing and is therefore less suitable for grounding.

2.4.1 Shielding

Overview

Shielding is required for interference-free signal transmission. This weakens electrical, magnetic or electromagnetic interference fields. To attach the shield the mounting of shield bus carriers are necessary. The shield bus carrier (available as accessory) serves to carry the shield bus to connect cable shields. *'Installation guidelines'...page 45*

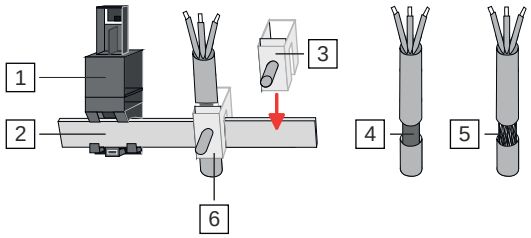

1 Shield bus carrier
2 Shield bus (10mm x 3mm)
3 Shield clamp
4 Cable shield with metal foil
5 Cable shield with wire mesh (close-meshed)
6 Cable shield mounted with shield clamp

Shield attachment

1. System SLIO head and 8x periphery modules have a carrier hole for the shield bus carrier. Push the shield bus carrier, until they engage into the module. With a flat profile rail for adaptation to a flat profile rail you may remove the spacer of the shield bus carrier.
2. Put your shield bus into the shield bus carrier.

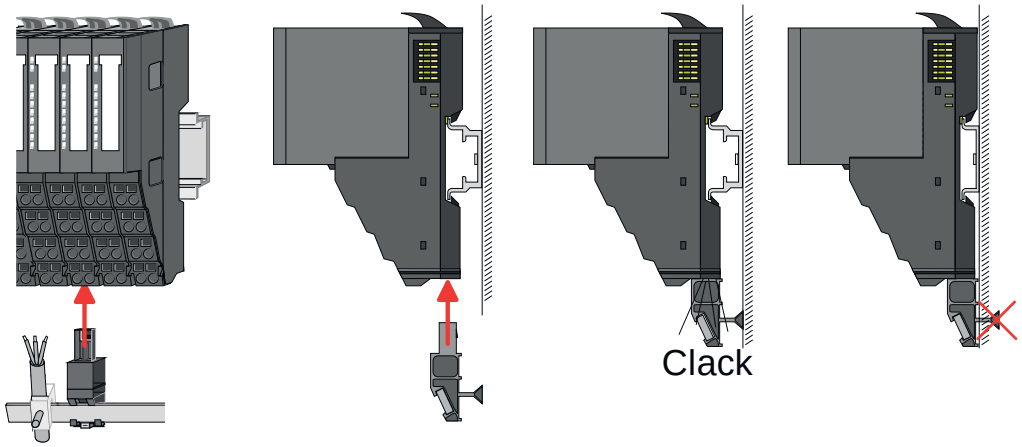

3. Attach the cables with the accordingly stripped cable screen and fix it by the shield clamp with the shield bus.
4. The shield bus must always be grounded. Keep all cable connections as short as possible. To ground the shield bus, connect a FE conductor to the shield bus via a shield clamp and screw it to the base plate as close as possible and with low impedance.

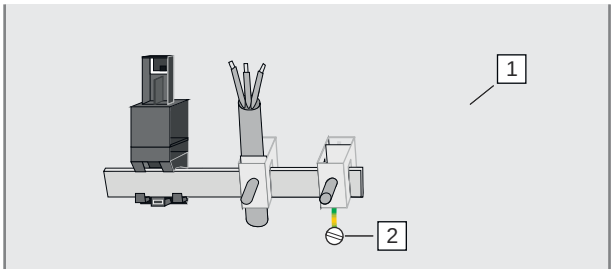

1 Base plate
2 FE conductor screwed to base plate

2.5 Mounting 8x periphery modules

CAUTION

Requirements for UL compliance use

- Use for power supply exclusively SELV/PELV power supplies.
- The System SLIO must be installed and operated in a housing according to IEC 61010-1 9.3.2 c).

CAUTION

Danger of injury from electrical shock and damage to the unit!

Put the System SLIO in a safe, powered down state before starting installation, disassembly or wiring of the System SLIO modules!

There is a locking lever at the top side of the module. For mounting and demounting this locking lever is to be turned upwards until this engages. For mounting place the module to the module installed before and push the module to the profile rail guided by the strips at the upper and lower side of the module. The module is fixed to the profile rail by pushing downward the locking lever. The modules may either separately be mounted to the profile rail or as block. Here is to be considered that each locking lever is opened. The modules are each installed on a profile rail. The electronic and power section supply are connected via the backplane bus. Up to 64 modules may be mounted. Please consider here that the sum current of the electronic power supply does not exceed the maximum value of 3A. By means of the power module 007-1AB10 the current of the electronic power supply may be expanded accordingly.

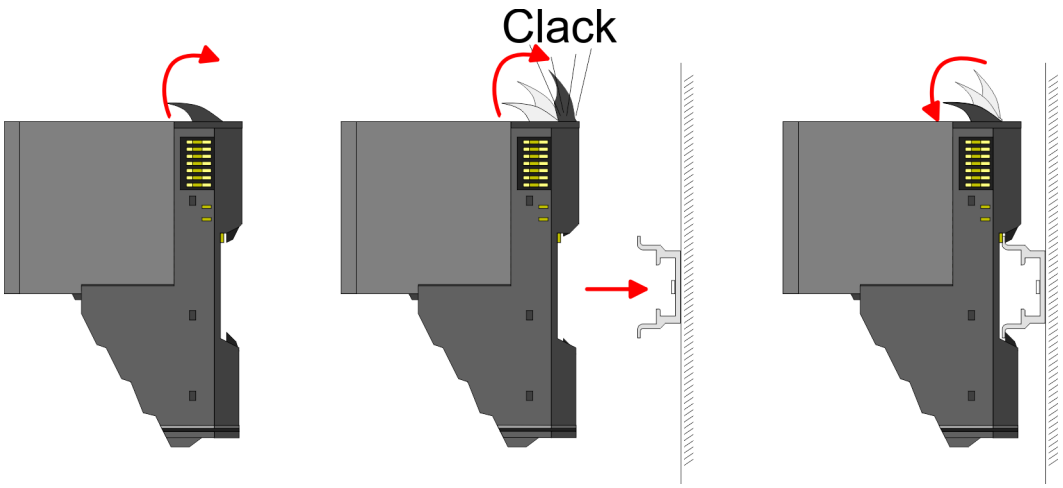

Terminal and electronic module

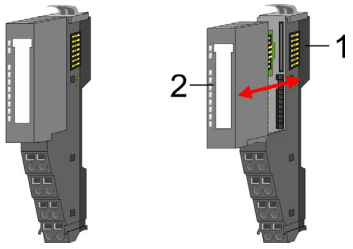

Each periphery module consists of a *terminal* and an *electronic module*.

1 Terminal module
2 Electronic module

For the exchange of a electronic module, the electronic module may be pulled forward after pressing the unlocking lever at the lower side of the module. For installation plug the electronic module guided by the strips at the lower side until this engages audible to the terminal module.

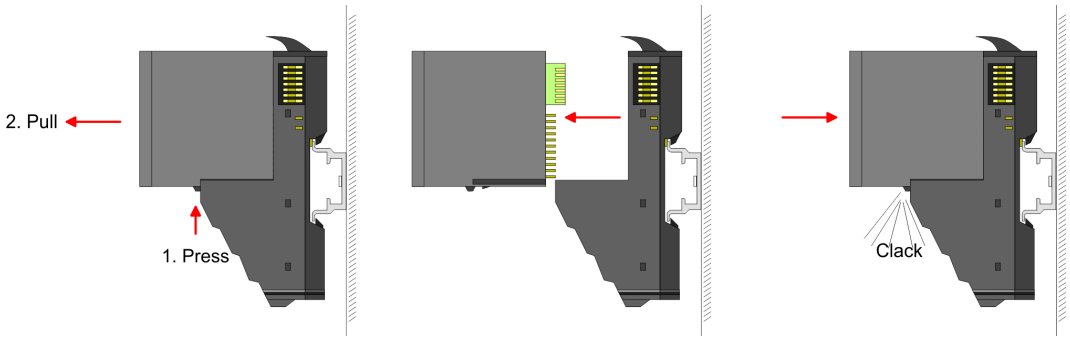

Coding

There is the possibility to fix the assignment of electronic and terminal module. Here coding pins (order number 000-0AC00) can be used. The coding pin consists of a coding jack and a coding plug. By combining electronic and terminal module with coding pin, the coding jack remains in the electronic module and the coding plug in the terminal module. This ensures that after replacing the electronics module just another electronic module can be plugged with the same encoding.

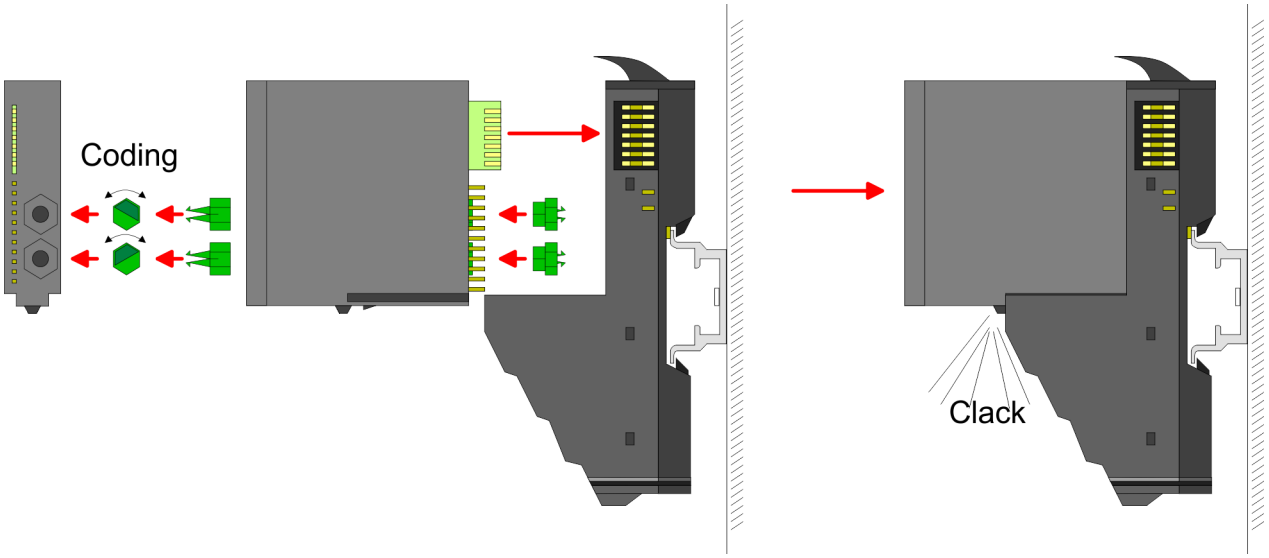

Each electronic module has on its back 2 coding sockets for coding jacks. Due to the characteristics, with the coding jack 6 different positions can be plugged, each. Thus there are 36 possible combinations for coding with the use of both coding sockets.

1. Plug, according to your coding, 2 coding jacks in the coding sockets of your electronic module until they lock
2. Now plug the according coding plugs into the coding jacks.
3. To fix the coding put both the electronic and terminal module together until they lock

CAUTION

Please consider that when replacing an already coded electronic module, this is always be replaced by an electronic module with the same coding.

Even with an existing coding on the terminal module, you can plug an electronic module without coding. The user is responsible for the correct usage of the coding pins. Yaskawa assumes no liability for incorrectly attached electronic modules or for damages which arise due to incorrect coding!

Mounting periphery modules

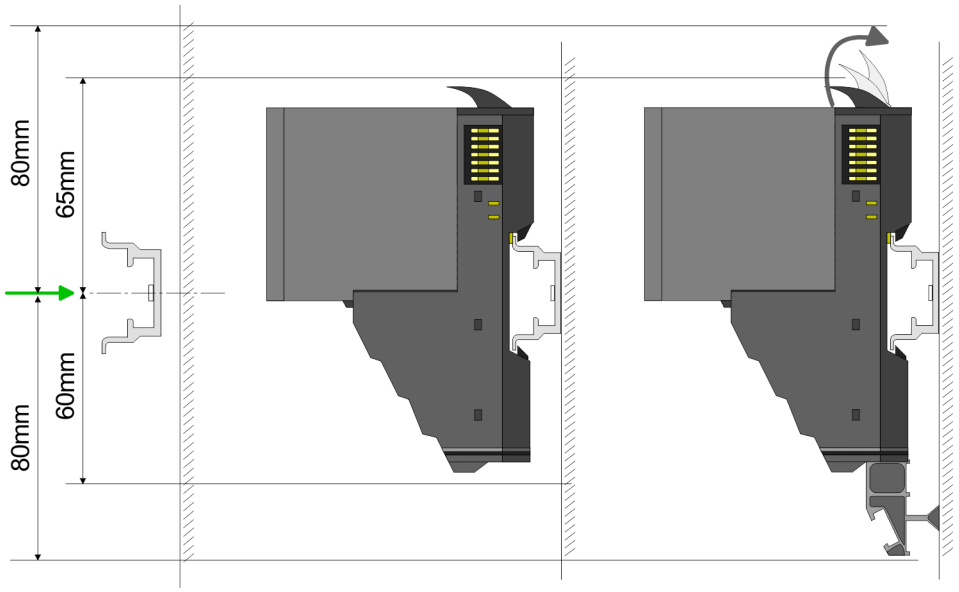

1. Mount the profile rail. Please consider that a clearance from the middle of the profile rail of at least 80mm above and 60mm below, respectively 80mm by deployment of shield bus carriers, exist.
2. Mount your head module such as CPU or field bus coupler.
3. Before mounting the periphery modules you have to remove the bus cover at the right side of the head module by pulling it forward. Keep the cover for later mounting.

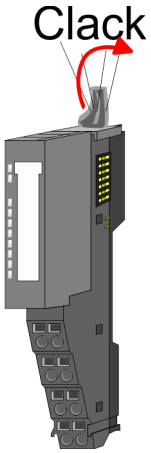

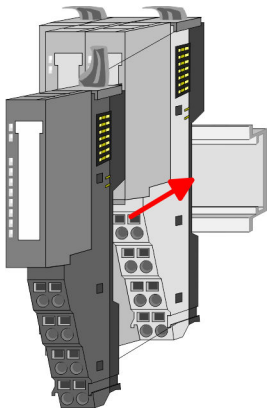

4. For mounting turn the locking lever of the module upwards until it engages.
5. For mounting place the module to the module installed before and push the module to the profile rail guided by the strips at the upper and lower side of the module.
6. Turn the locking lever of the periphery module downward, again.

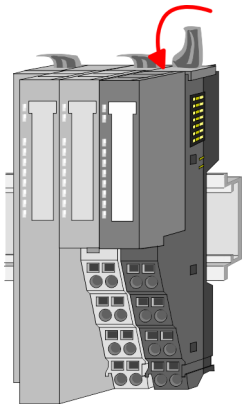

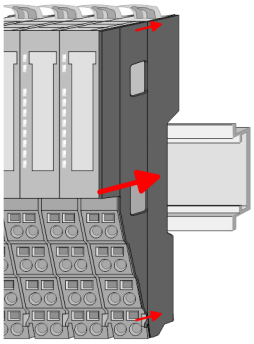

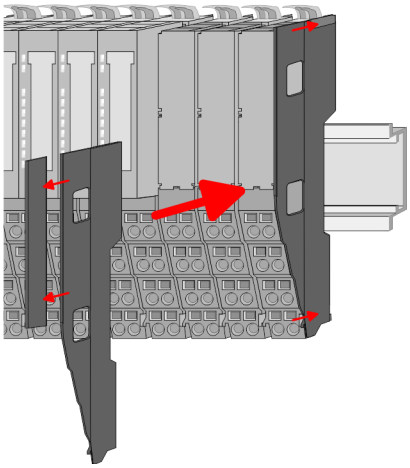

7. After mounting the whole system, to protect the backplane bus connectors at the last module you have to mount the bus cover, now. If the last module is a clamp module, for adaptation the upper part of the bus cover is to be removed.

2.6 Mounting 16x periphery modules

CAUTION

Requirements for UL compliance use

- Use for power supply exclusively SELV/PELV power supplies.
- The System SLIO must be installed and operated in a housing according to IEC 61010-1 9.3.2 c).

CAUTION

Danger of injury from electrical shock and damage to the unit!

Put the System SLIO in a safe, powered down state before starting installation, disassembly or wiring of the System SLIO modules!

There is a locking lever at the top side of the module. For mounting and demounting this locking lever is to be turned upwards until this engages. For mounting place the module to the module installed before and push the module to the profile rail guided by the strips at the upper and lower side of the module. The module is fixed to the profile rail by pushing downward the locking lever. The modules may either separately be mounted to the profile rail or as block. Here is to be considered that each locking lever is opened. The modules are each installed on a profile rail. The electronic and power section supply are connected via the backplane bus. Up to 64 modules may be mounted. Please consider here that the sum current of the electronic power supply does not exceed the maximum value of 3A. By means of the power module 007-1AB10 the current of the electronic power supply may be expanded accordingly.

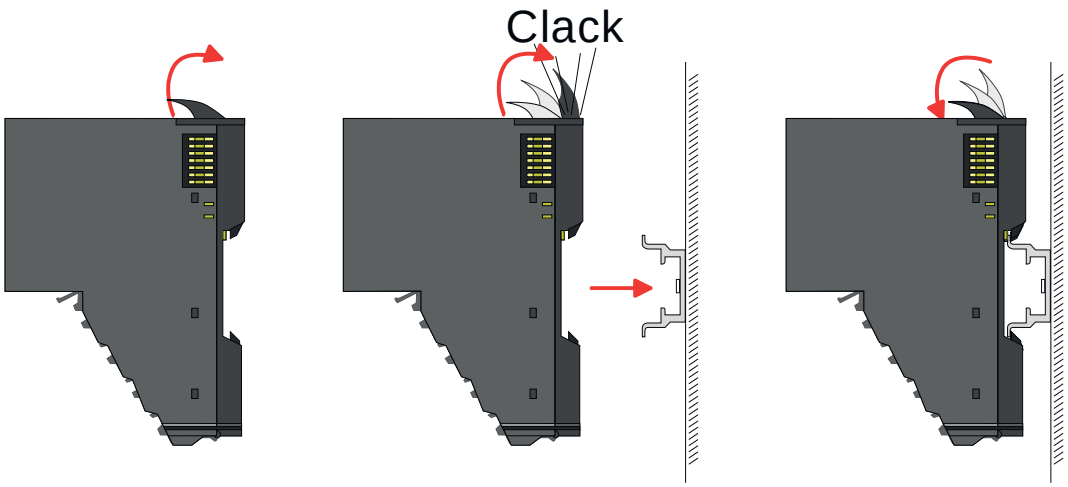

Electronic unit and terminal block

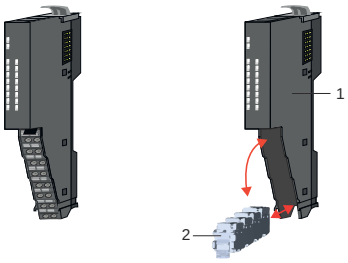

Each 16x periphery module consists of an *electronic unit* and a *terminal block*.

1 Electronic unit
2 Terminal block

To replace an electronic unit, you can push down and pull off the terminal block after releasing the lock. To mount the terminal block, place it horizontally on the lower side of the electronic unit and push it towards the electronic unit until it clicks into place.

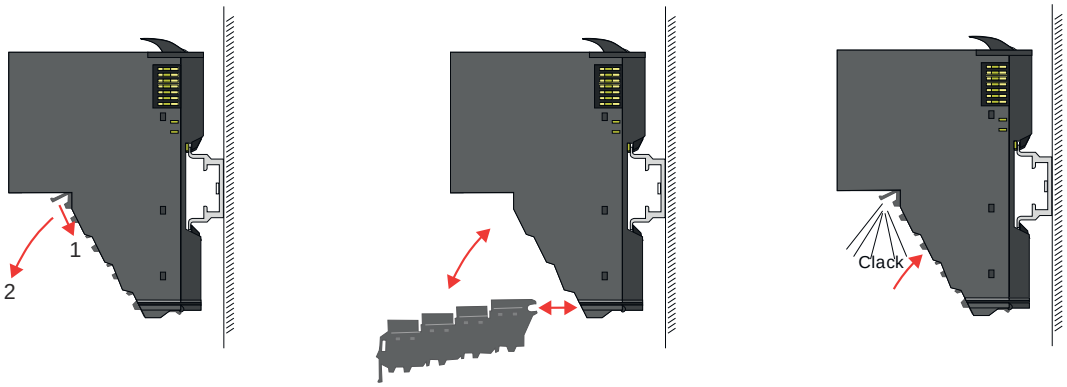

Mounting periphery module

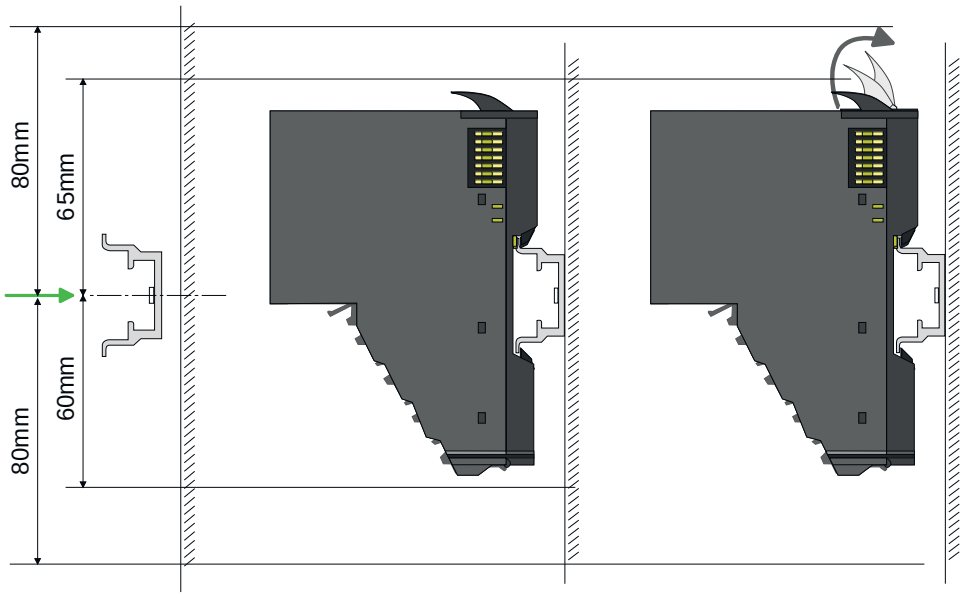

1. Mount the profile rail. Please consider that a clearance from the middle of the profile rail of at least 80mm above and 80mm below exist.
2. Mount your head module such as CPU or field bus coupler.
3. Before mounting the periphery modules you have to remove the bus cover at the right side of the head module by pulling it forward. Keep the cover for later mounting.

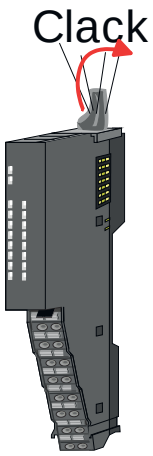

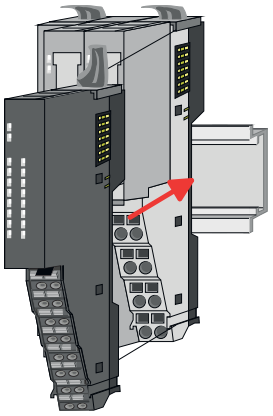

4. For mounting turn the locking lever of the module upwards until it engages.
5. For mounting place the module to the module installed before and push the module to the profile rail guided by the strips at the upper and lower side of the module.
6. Turn the locking lever of the periphery module downward, again.

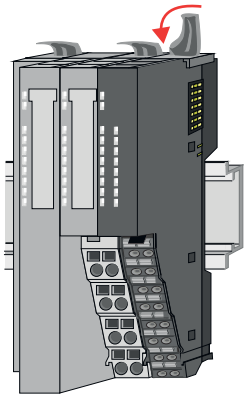

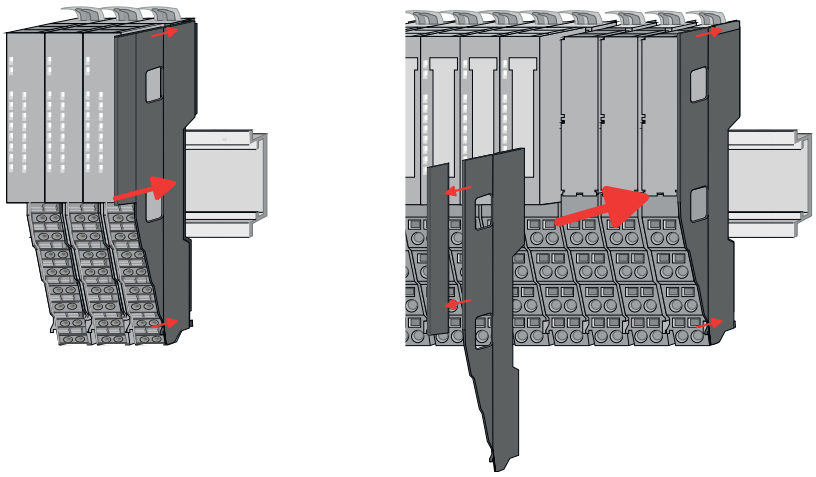

7. After mounting the whole system, to protect the backplane bus connectors at the last module you have to mount the bus cover, now. If the last module is a clamp module, for adaptation the upper part of the bus cover is to be removed.

2.7 Wiring 8x periphery modules

Terminal module terminals

CAUTION

Do not connect hazardous voltages!

If this is not explicitly stated in the corresponding module description, hazardous voltages are not allowed to be connected to the corresponding terminal module!

CAUTION

Danger of injury from electrical shock and damage to the unit!

Put the System SLIO in a safe, powered down state before starting installation, disassembly or wiring of the System SLIO modules!

CAUTION

Consider temperature for external cables!

Cables may experience temperature increase due to system heat dissipation. Thus the cabling specification must be chosen 25°C above ambient temperature!

- With wiring the terminal modules, terminals with spring clamp technology are used for wiring. The spring clamp technology allows quick and easy connection of your signal and supply lines. In contrast to screw terminal connections this type of connection is vibration proof.

Data

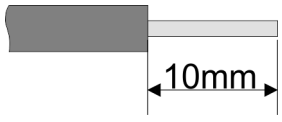

Please use copper wire only!

U_{max}	240V AC / 30V DC
I_{max}	10A
Cross section	0.08 ... 1.5mm² (AWG 28 ... 16)
Stripping length	10mm

Wiring procedure

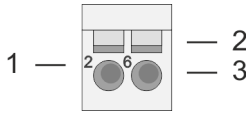

1 Pin number at the connector
2 Opening for screwdriver
3 Connection hole for wire

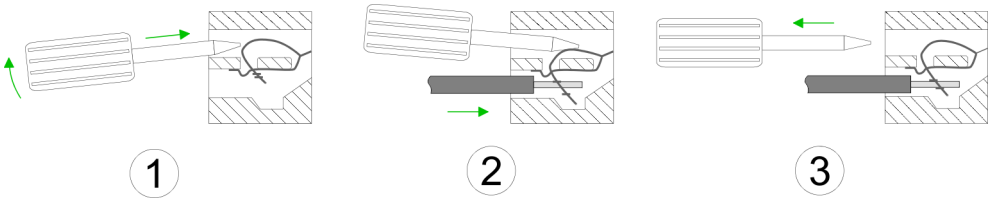

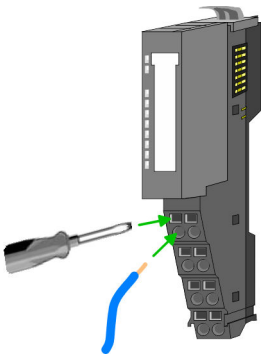

1. Insert a suited screwdriver at an angel into the square opening as shown. Press and hold the screwdriver in the opposite direction to open the contact spring.
2. Insert the stripped end of wire into the round opening. You can use wires with a cross section of 0.08mm² up to 1.5mm²
3. By removing the screwdriver, the wire is securely fixed via the spring contact to the terminal.

Shield attachment *'Shielding'...page 21*

2.8 Wiring 16x periphery modules

Terminal block connectors

CAUTION

Do not connect hazardous voltages!

If this is not explicitly stated in the corresponding module description, hazardous voltages are not allowed to be connected to the corresponding terminal block!

CAUTION

Danger of injury from electrical shock and damage to the unit!

Put the System SLIO in a safe, powered down state before starting installation, disassembly or wiring of the System SLIO modules!

CAUTION

Consider temperature for external cables!

Cables may experience temperature increase due to system heat dissipation. Thus the cabling specification must be chosen 25°C above ambient temperature!

- The 16x periphery module has a removable terminal block for wiring.
- With the wiring of the terminal block a "push-in" spring-clip technique is used. This allows a quick and easy connection of your signal and supply lines.
- The clamping off takes place by means of a screwdriver.

Data

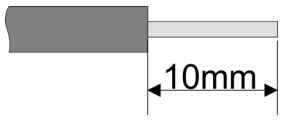

Please use copper wire only!

U_{max}	30V DC
I_{max}	10A
Cross section solid wire	0.25 ... 0.75mm²
Cross section with ferrule	0.14 ... 0.75mm²
AWG	24 ... 16
Stripping length	10mm

Wiring procedure

1 Release area
2 Connection hole for wire

Insert wire

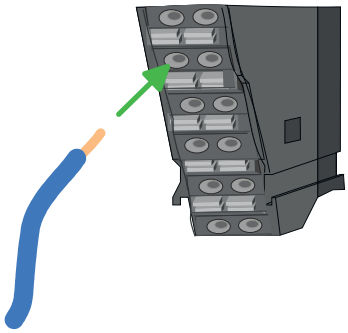

The wiring happens without a tool.

1. Determine according to the casing labelling the connection position.
2. Insert through the round connection hole of the according contact your prepared wire until it stops, so that it is fixed.
   ➥ By pushing the contact spring opens, thus ensuring the necessary contact pressure.

Remove wire

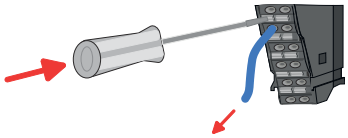

The wire is to be removed by means of a screwdriver with 2.5mm blade width.

1. Press with your screwdriver vertically at the release button.
   ➥ The contact spring releases the wire.
2. Pull the wire from the round hole.

2.9 Wiring power modules

Terminal module terminals

Power modules are either integrated to the head module or may be installed between the periphery modules. With power modules, terminals with spring clamp technology are used for wiring. The spring clamp technology allows quick and easy connection of your signal and supply lines. In contrast to screw terminal connections this type of connection is vibration proof.

Data

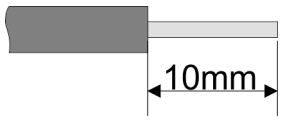

Please use copper wire only!

U_{max}	30V DC
I_{max}	10A
Cross section	0.08 ... 1.5mm² (AWG 28 ... 16)
Stripping length	10mm

Wiring procedure

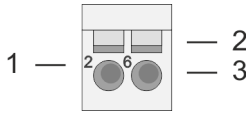

1 Pin number at the connector
2 Opening for screwdriver
3 Connection hole for wire

CAUTION

Danger of injury from electrical shock and damage to the unit!

Put the System SLIO in a safe, powered down state before starting installation, disassembly or wiring of the System SLIO modules!

CAUTION

Consider temperature for external cables!

Cables may experience temperature increase due to system heat dissipation. Thus the cabling specification must be chosen 25°C above ambient temperature!

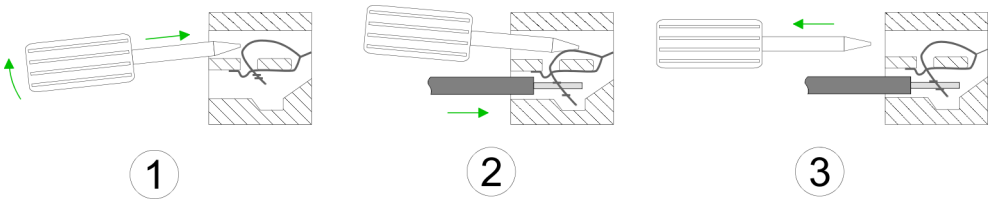

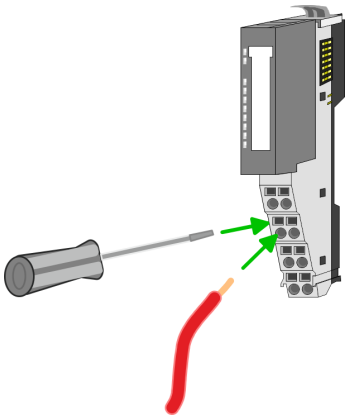

1. Insert a suited screwdriver at an angel into the square opening as shown. Press and hold the screwdriver in the opposite direction to open the contact spring.
2. Insert the stripped end of wire into the round opening. You can use wires with a cross section of 0.08mm² up to 1.5mm²
3. By removing the screwdriver, the wire is securely fixed via the spring contact to the terminal.

Shield attachment *'Shielding'...page 21*

Standard wiring

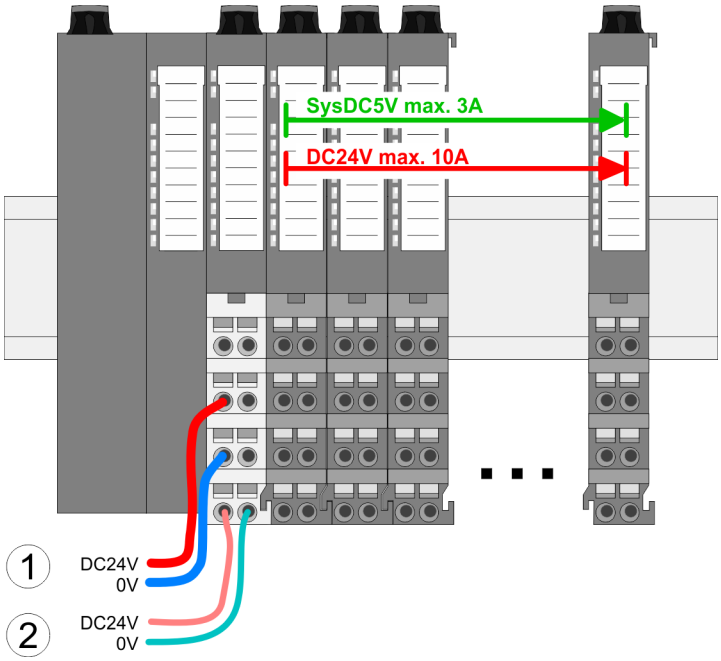

(1) DC 24V for power section supply I/O area (max. 10A)
(2) DC 24V for electronic power supply bus coupler and I/O area

PM - Power module

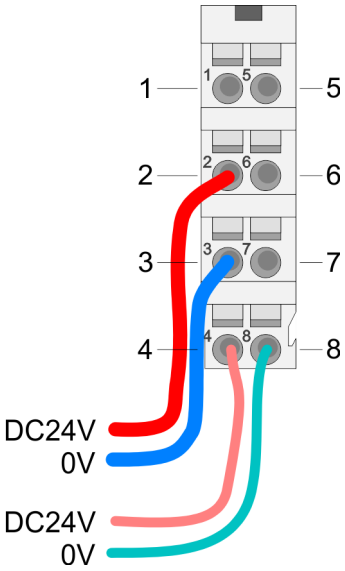

For wires with a core cross-section of 0.08mm² up to 1.5mm².

Pos.	Function	Type	Description
1	---	---	not connected
2	DC 24V	I	DC 24V for power section supply
3	0V	I	GND for power section supply
4	Sys DC 24V	I	DC 24V for electronic power supply
5	---	---	not connected
6	DC 24V	I	DC 24V for power section supply
7	0V	I	GND for power section supply
8	Sys 0V	I	GND for electronic power supply

I: Input

CAUTION

Since the power section supply is not internally protected, it is to be externally protected with a fuse, which corresponds to the maximum current. This means max. 10A is to be protected by a 10A fuse (fast) respectively by a line circuit breaker 10A characteristics Z and should be UL approved!

The electronic power section supply is internally protected against higher voltage by fuse. The fuse is within the power module. If the fuse releases, its electronic module must be exchanged!

Fusing

- The power section supply is to be externally protected with a fuse, which corresponds to the maximum current. This means max. 10A is to be protected with a 10A fuse (fast) respectively by a line circuit breaker 10A characteristics Z and should be UL approved.
  - For modules with positive logic (PNP), place the fuse on the positive connector.
  - For modules with negative logic (NPN), place the fuse on the negative connector.
  - For mixed logic, one fuse must be placed on the negative and one on the positive connector.
- It is recommended to externally protect the electronic power supply for head modules and I/O area with a 2A fuse (fast) respectively by a line circuit breaker 2A characteristics Z and should be UL approved.
- The electronic power supply for the I/O area of the power module 007-1AB10 should also be externally protected with a 1A fuse (fast) respectively by a line circuit breaker 1A characteristics Z and should be UL approved.

State of the electronic power supply via LEDs

After PowerON of the System SLIO the LEDs RUN respectively MF get on so far as the sum current does not exceed 3A. With a sum current greater than 3A the LEDs may not be activated. Here the power module with the order number 007-1AB10 is to be placed between the peripheral modules.

Deployment of the power modules

- If the 10A for the power section supply is no longer sufficient, you may use the power module with the order number 007-1AB00. So you have also the possibility to define isolated groups.
- The power module with the order number 007-1AB10 is to be used if the 3A for the electronic power supply at the backplane bus is no longer sufficient. Additionally you get an isolated group for the DC 24V power section supply with max. 4A.
- By placing the power module 007-1AB10 at the following backplane bus modules may be placed with a sum current of max. 2A. Afterwards a power module is to be placed again. To secure the power supply, the power modules may be mixed used.

Power module 007-1AB00

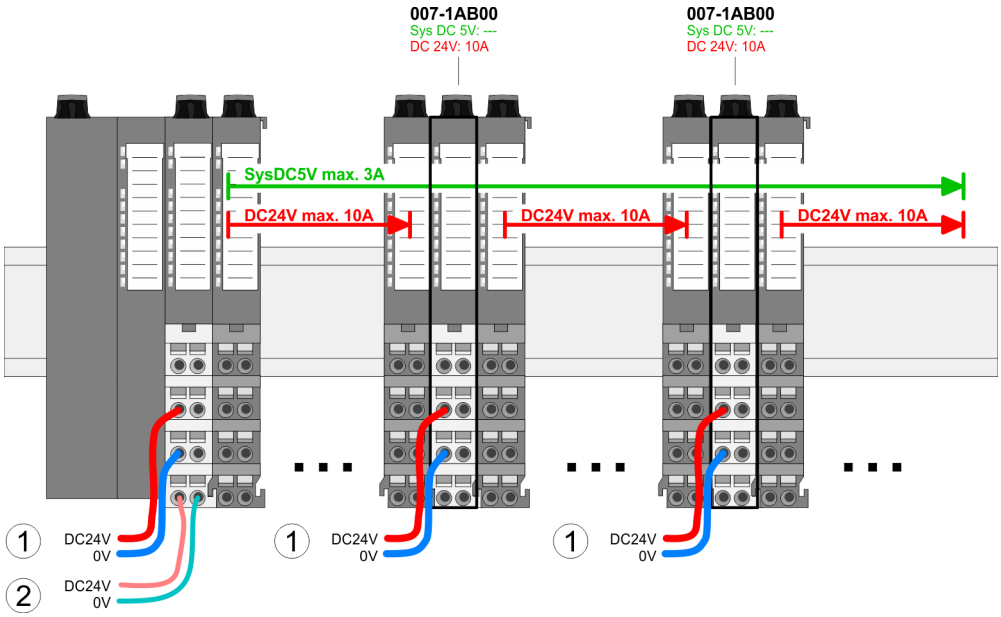

Power module 007-1AB10

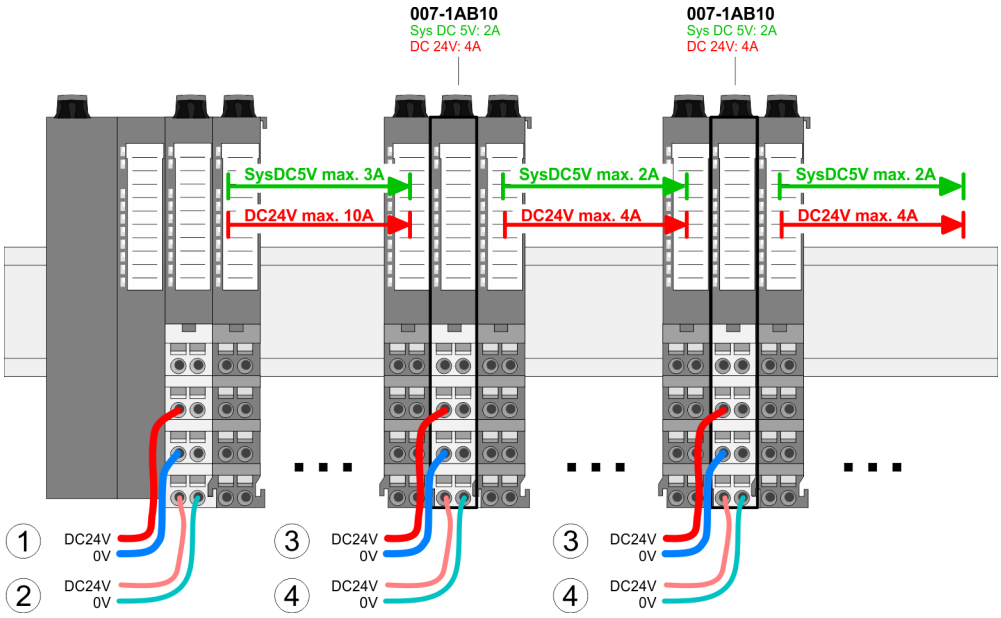

(1) DC 24V for power section supply I/O area (max. 10A)
(2) DC 24V for electronic power supply bus coupler and I/O area
(3) DC 24V for power section supply I/O area (max. 4A)
(4) DC 24V for electronic power supply I/O area

2.10 Demounting 8x periphery modules

Proceeding

Exchange of an electronic module

CAUTION
Put the System SLIO in a safe, powered down state before starting disassembly!

1. Power-off your system.

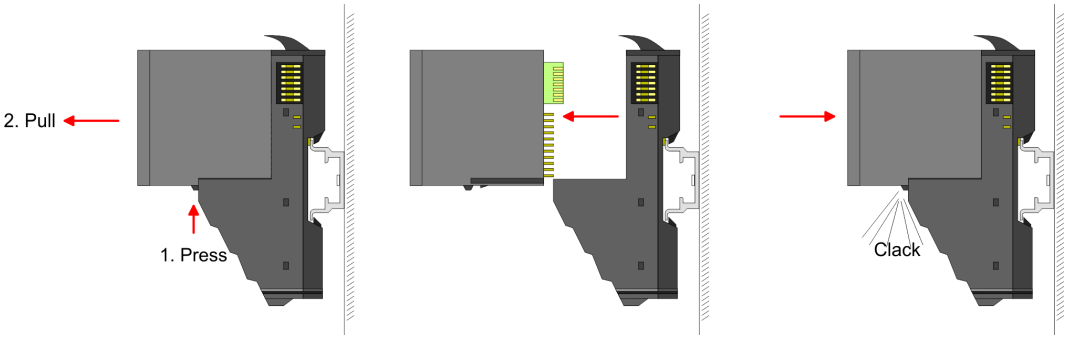

2. For the exchange of a electronic module, the electronic module may be pulled forward after pressing the unlocking lever at the lower side of the module.
3. For installation plug the new electronic module guided by the strips at the lower side until this engages to the terminal module.

➡ Now you can bring your system back into operation.

Easy Maintenance

'Easy Maintenance' means the support for adding and removing electronic modules during operation without having to restart the system. If this is supported by your head module, you will find more detailed information on this in the "Deployment" chapter. *'Easy Maintenance'...page 41*

Exchange of a periphery module

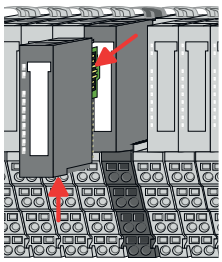

1. Power-off your system.
2. Remove if exists the wiring of the module.
3. *For demounting and exchange of a (head) module or a group of modules, due to mounting reasons you always have to remove the electronic module right beside. After mounting it may be plugged again.*

   Press the unlocking lever at the lower side of the just mounted right module and pull it forward.

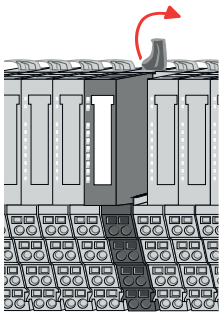

4. Turn the locking lever of the module to be exchanged upwards.

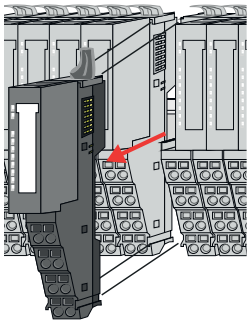

5. Pull the module.
6. For mounting turn the locking lever of the module to be mounted upwards.

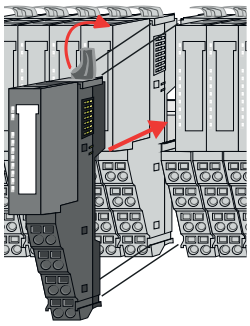

7. To mount the module put it to the gap between the both modules and push it, guided by the stripes at both sides, to the profile rail.
8. Turn the locking lever downward, again.

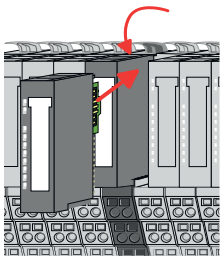

9. Plug again the electronic module, which you have removed before.
10. Wire your module.

    ➡ Now you can bring your system back into operation.

Exchange of a module group

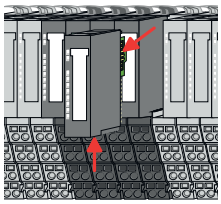

1. Power-off your system.
2. Remove if exists the wiring of the module group.
3. *For demounting and exchange of a (head) module or a group of modules, due to mounting reasons you always have to remove the electronic module right beside. After mounting it may be plugged again.*

   Press the unlocking lever at the lower side of the just mounted right module near the module group and pull it forward.

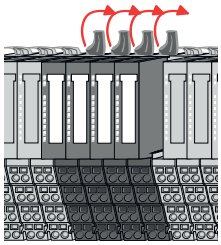

4. Turn all the locking lever of the module group to be exchanged upwards.

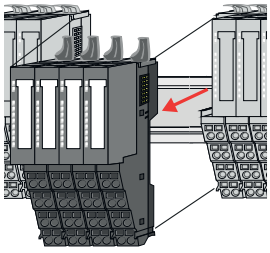

5. Pull the module group forward.
6. For mounting turn all the locking lever of the module group to be mounted upwards.

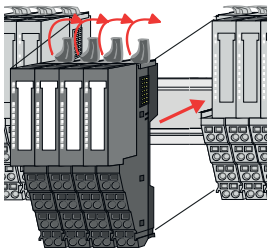

7. To mount the module group put it to the gap between the both modules and push it, guided by the stripes at both sides, to the profile rail.
8. Turn all the locking lever downward, again.

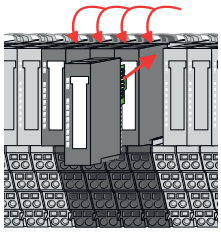

9. Plug again the electronic module, which you have removed before.
10. Wire your module group.

    ➡ Now you can bring your system back into operation.

2.11 Demounting 16x periphery modules

Proceeding

Exchange of an electronic unit

CAUTION

Put the System SLIO in a safe, powered down state before starting disassembly!

1. Power-off your system.
2. To replace an electronic unit, you can push down and pull off the terminal block after releasing the lock.

   To mount the terminal block, place it horizontally on the lower side of the electronic unit and push it towards the electronic unit until it clicks into place.

   ➡ Now you can bring your system back into operation.

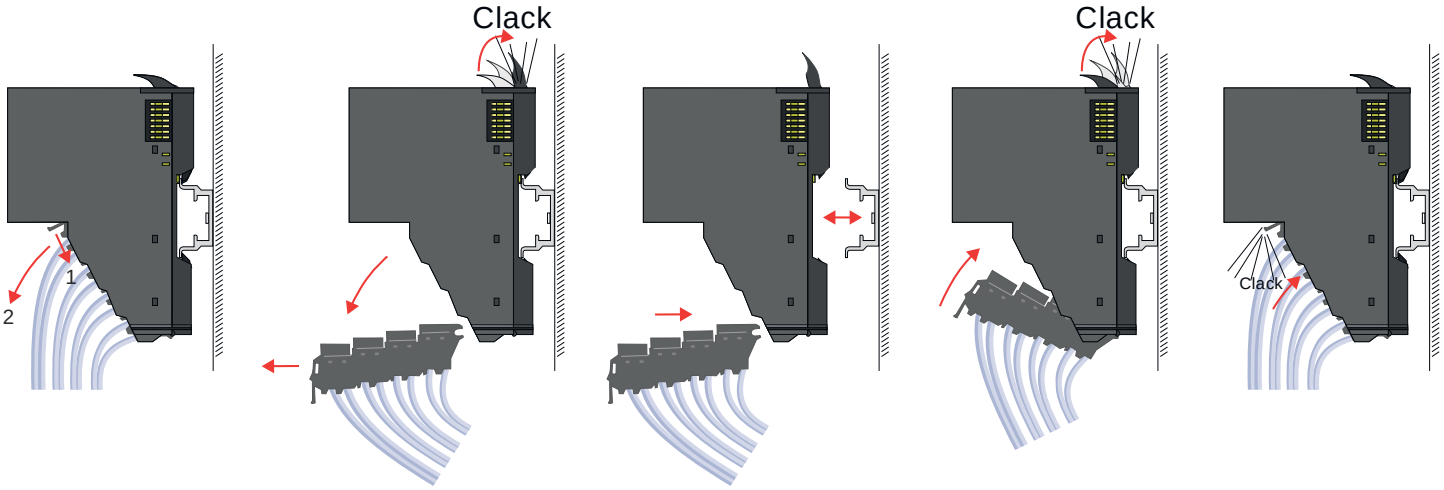

Exchange of a 16x periphery module

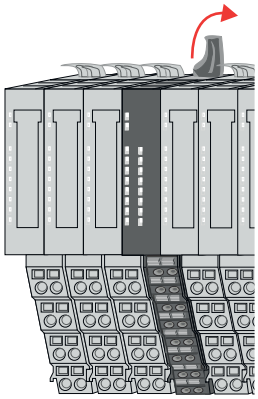

1. Power-off your system.
2. Remove if exists the wiring of the module respectively the wired terminal block.
3. *In contrast to 8x periphery modules, you can directly demount and mount 16x periphery modules.*

   Turn the locking lever of the module to be exchanged upwards.

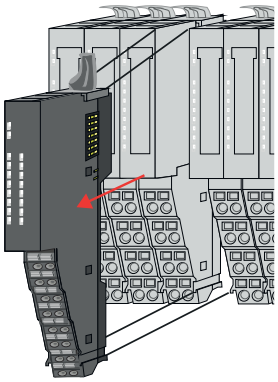

4. Pull the module.
5. For mounting turn the locking lever of the module to be mounted upwards.

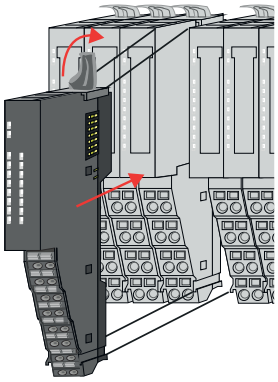

6. To mount the module put it to the gap between the both modules and push it, guided by the stripes at both sides, to the profile rail.

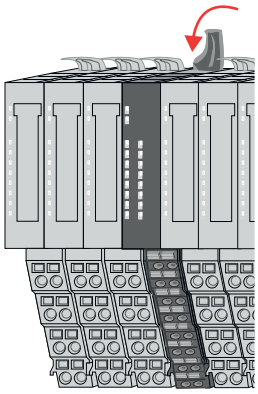

7. Turn the locking lever downward, again.
8. Wire your module respectively plug the wired terminal block again.

➡ Now you can bring your system back into operation.

Exchange of a module group

1. Power-off your system.
2. Remove if exists the wiring of the module group respectively the wired terminal blocks.

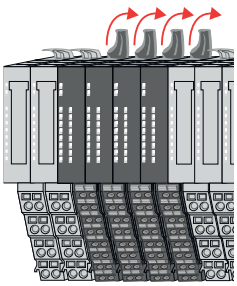

3.

In contrast to 8x periphery modules, you can directly demount and mount 16x periphery modules.

Turn all the locking lever of the module group to be exchanged upwards.

Demounting 16x periphery modules

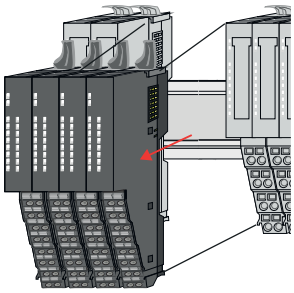

4. Pull the module group forward.
5. For mounting turn all the locking lever of the module group to be mounted upwards.

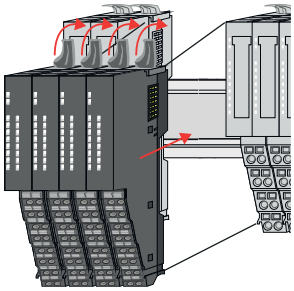

6. To mount the module group put it to the gap between the both modules and push it, guided by the stripes at both sides, to the profile rail.

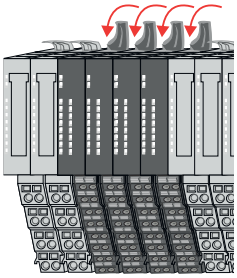

7. Turn all the locking lever downward, again.
8. Wire your module group respectively plug the wired terminal blocks again.

➥ Now you can bring your system back into operation.

2.12 Easy Maintenance

Overview

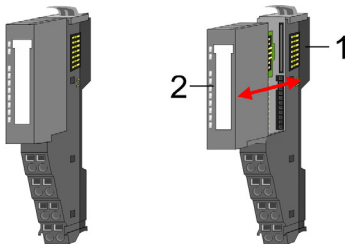

1 Terminal module
2 Electronic module

Easy Maintenance means the support for adding and removing an electronic module during operation without having to restart the system. Here the following behavior is shown by the example of a CPU:

- Electronic module is removed
  - The CPU detects a module failure on the backplane bus.
  - Diagnostic message *'System SLIO bus failure'* (0x39D0) is triggered.
  - OB 86 is called. If this is not available, the CPU switches to STOP otherwise it remains in RUN.
  - The SF LED of the CPU lights up.
  - The I/O data of all modules become invalid.
- Identical electronic module is plugged
  - The CPU detects the module return on the backplane bus.
  - The SF-LED of the CPU gets off.
  - All RUN LEDs on the modules get on and the MF LEDs get off.
  - Diagnostic message *'System SLIO bus recovery'* (0x38D0) is triggered.
  - OB 86 is called. If this is not available, the CPU switches to STOP otherwise it remains in RUN.
  - The I/O data of all modules become valid again.
- Wrong electronic module is plugged
  - The CPU detects the wrong module.
  - Diagnostic message *'System SLIO bus recovery, but expected configuration does not match actual configuration'* (0x38D1) is triggered.
  - The SF LED of the CPU remains on.
  - The MF LED of the wrong module flashes.
  - OB 86 is called. If this is not available, the CPU switches to STOP otherwise it remains in RUN.
  - With the exception of the wrong module, the I/O data of all modules become valid again.

CAUTION

Please note that only electronic modules may be exchanged during operation! Replacing an 8x or 16x periphery module during operation can damage the module and the system!

Please note that the CPU switches to STOP, if there is no OB 86 configured when adding or removing System SLIO modules!

2.13 Trouble shooting - LEDs

General

Each module has the LEDs RUN and MF on its front side. Errors or incorrect modules may be located by means of these LEDs.

In the following illustrations flashing LEDs are marked by ☼.

Sum current of the electronic power supply exceeded

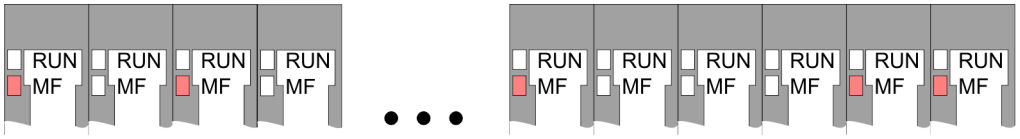

Behavior: After PowerON the RUN LED of each module is off and the MF LED of each module is sporadically on.

Reason: The maximum current for the electronic power supply is exceeded.

Remedy: As soon as the sum current of the electronic power supply is exceeded, always place the power module 007-1AB10. *'Wiring power modules'...page 31*

Error in configuration

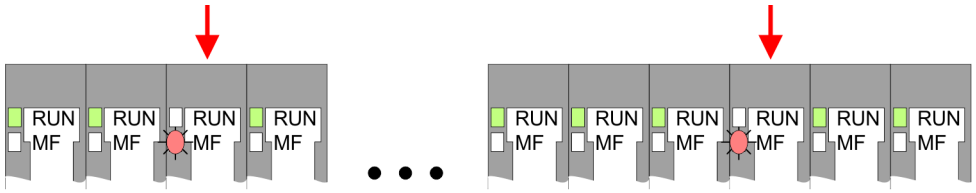

Behavior: After PowerON the MF LED of one module respectively more modules flashes. The RUN LED remains off.

Reason: At this position a module is placed, which does not correspond to the configured module.

Remedy: Match configuration and hardware structure.

Module failure

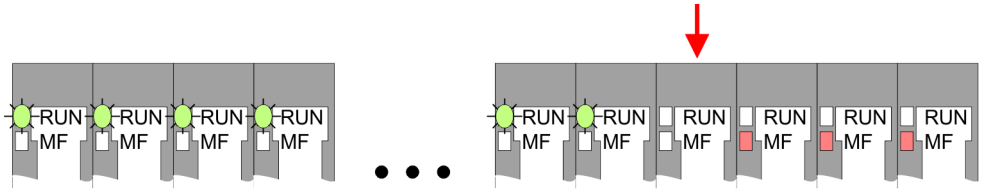

Behavior: After PowerON all of the RUN LEDs up to the defective module are flashing. With all following modules the MF LED is on and the RUN LED is off.

Reason: The module on the right of the flashing modules is defective.

Remedy: Replace the defective module.

2.14 Industrial security and installation guidelines

2.14.1 Industrial security in information technology

Latest version

This chapter can also be found as a guide *'Industrial IT Security'* in the *'Download Center'* of www.yaskawa.eu.com

Hazards

The topic of data security and access protection has become increasingly important in the industrial environment. The increased networking of entire industrial systems to the network levels within the company together with the functions of remote maintenance have all served to increase vulnerability. Hazards can arise from:

- Internal manipulation such as technical errors, operating and program errors and deliberate program or data manipulation.
- External manipulation such as software viruses, worms and trojans.
- Human carelessness such as password phishing.

Precautions

The most important precautions to prevent manipulation and loss of data security in the industrial environment are:

- Encrypting the data traffic by means of certificates.
- Filtering and inspection of the traffic by means of VPN - "Virtual Private Networks".
- Identification of the user by "Authentication" via save channels.
- Segmenting in protected automation cells, so that only devices in the same group can exchange data.
- Deactivation of unnecessary hardware and software.

Further Information

You can find more information about the measures on the following websites:

- Federal Office for Information Technology ➦ *www.bsi.bund.de*
- Cybersecurity & Infrastructure Security Agency ➦ *us-cert.cisa.gov*
- VDI / VDE Society for Measurement and Automation Technology ➦ *www.vdi.de*

2.14.1.1 Protection of hardware and applications

Precautions

- Do not integrate any components or systems into public networks.
  - Use VPN "Virtual Private Networks" for use in public networks. This allows you to control and filter the data traffic accordingly.
- Always keep your system up-to-date.
  - Always use the latest firmware version for all devices.
  - Update your user software regularly.
- Protect your systems with a firewall.
  - The firewall protects your infrastructure internally and externally.
  - This allows you to segment your network and isolate entire areas.
- Secure access to your plants via user accounts.
  - If possible, use a central user management system.
  - Create a user account for each user for whom authorization is essential.
  - Always keep user accounts up-to-date and deactivate unused user accounts.
- Secure access to your plants via secure passwords.
  - Change the password of a standard login after the first start.
  - Use strong passwords consisting of upper/lower case, numbers and special characters. The use of a password generator or manager is recommended.
  - Change the passwords according to the rules and guidelines that apply to your application.
- Deactivate inactive communication ports respectively protocols.
  - Only the communication ports that are used for communication should be activated.
  - Only the communication protocols that are used for communication should be activated.
- Consider possible defence strategies when planning and securing the system.
  - The isolation of components alone is not sufficient for comprehensive protection. An overall concept is to be drawn up here, which also provides defensive measures in the event of a cyber attack.
  - Periodically carry out threat assessments. Among others, a comparison is made here between the protective measures taken and those required.
- Limit the use of external storage media.
  - Via external storage media such as USB memory sticks or SD memory cards, malware can get directly into a system while bypassing a firewall.
  - External storage media or their slots must be protected against unauthorized physical access, e.g. by using a lockable control cabinet.
  - Make sure that only authorized persons have access.
  - When disposing of storage media, make sure that they are safely destroyed.
- Use secure access paths such as HTTPS or VPN for remote access to your plant.
- Enable security-related event logging in accordance with the applicable security policy and legal requirements for data protection.

2.14.1.2 Protection of PC-based software

Precautions

Since PC-based software is used for programming, configuration and monitoring, it can also be used to manipulate entire systems or individual components. Particular caution is required here!

- Use user accounts on your PC systems.
  - If possible, use a central user management system.
  - Create a user account for each user for whom authorization is essential.
  - Always keep user accounts up-to-date and deactivate unused user accounts.
- Protect your PC systems with secure passwords.
  - Change the password of a standard login after the first start.
  - Use strong passwords consisting of upper/lower case, numbers and special characters. The use of a password generator or manager is recommended.
  - Change the passwords according to the rules and guidelines that apply to your application.
- Enable security-related event logging in accordance with the applicable security policy and legal requirements for data protection.
- Protect your PC systems by security software.
  - Install virus scanners on your PC systems to identify viruses, trojans and other malware.
  - Install software that can detect phishing attacks and actively prevent them.
- Always keep your software up-to-date.
  - Update your operating system regularly.
  - Update your software regularly.
- Make regular backups and store the media at a safe place.
- Regularly restart your PC systems. Only boot from storage media that are protected against manipulation.
- Use encryption systems on your storage media.
- Perform security assessments regularly to reduce the risk of manipulation.
- Use only data and software from approved sources.
- Uninstall software which is not used.
- Disable unused services.
- Activate a password-protected screen lock on your PC systems.
- Always lock your PC systems as soon as you leave your PC workstation.
- Do not click any links that come from unknown sources. If necessary ask, e.g. on e-mails.
- Use secure access paths such as HTTPS or VPN for remote access to your PC system.

2.14.2 Installation guidelines

General

The installation guidelines contain information about the interference free deployment of a PLC system. There is the description of the ways, interference may occur in your PLC, how you can make sure the electromagnetic compatibility (EMC), and how you manage the isolation.

What does EMC mean?

Electromagnetic compatibility (EMC) means the ability of an electrical device, to function error free in an electromagnetic environment without being interfered respectively without interfering the environment.

The components are developed for the deployment in industrial environments and meets high demands on the EMC. Nevertheless you should project an EMC planning before installing the components and take conceivable interference causes into account.

Possible interference causes

Electromagnetic interferences may interfere your control via different ways:

- Electromagnetic fields (RF coupling)
- Magnetic fields with power frequency
- Bus system
- Power supply
- Protected ground conductor

Depending on the spreading medium (lead bound or lead free) and the distance to the interference cause, interferences to your control occur by means of different coupling mechanisms.

There are:

- galvanic coupling
- capacitive coupling
- inductive coupling
- radiant coupling

Basic rules for EMC

In the most times it is enough to take care of some elementary rules to guarantee the EMC. Please regard the following basic rules when installing your PLC.

- Take care of a correct area-wide grounding of the inactive metal parts when installing your components.
  - Connect all inactive metal extensive and impedance-low.
  - Please try not to use aluminium parts. Aluminium is easily oxidizing and is therefore less suitable for grounding.
- When cabling, take care of the correct line routing.
  - Organize your cabling in line groups (high voltage, current supply, signal and data lines).
  - Always lay your high voltage lines and signal respectively data lines in separate channels or bundles.
  - Route the signal and data lines as near as possible beside ground areas (e.g. suspension bars, metal rails, tin cabinet).
- Proof the correct fixing of the lead isolation.
  - Data lines must be shielded.
  - Analog lines must be shielded. When transmitting signals with small amplitudes the one sided laying of the isolation may be favourable.
  - Cables for frequency inverters, servo and stepper motors must be shielded.
  - Lay the line isolation extensively on an isolation/protected ground conductor rail directly after the cabinet entry and fix the isolation with cable clamps.
  - Make sure that the isolation/protected ground conductor rail is connected impedance-low with the cabinet.
  - Use metallic or metallised plug cases for isolated data lines.
- In special use cases you should appoint special EMC actions.
  - Consider to wire all inductivities with erase links.
  - Please consider luminescent lamps can influence signal lines.
- Create a homogeneous reference potential and ground all electrical operating supplies when possible.
  - Please take care for the targeted employment of the grounding actions. The grounding of the PLC serves for protection and functionality activity.
  - Connect installation parts and cabinets with your PLC in star topology with the isolation/protected ground conductor system. So you avoid ground loops.
  - If there are potential differences between installation parts and cabinets, lay sufficiently dimensioned potential compensation lines.

Isolation of conductors

Electrical, magnetically and electromagnetic interference fields are weakened by means of an isolation, one talks of absorption. Via the isolation rail, that is connected conductive with the rack, interference currents are shunt via cable isolation to the ground. Here you have to make sure, that the connection to the protected ground conductor is impedance-low, because otherwise the interference currents may appear as interference cause.

When isolating cables you have to regard the following:

- If possible, use only cables with isolation tangle.
- The hiding power of the isolation should be higher than 80%.
- Normally you should always lay the isolation of cables on both sides. Only by means of the both-sided connection of the isolation you achieve high quality interference suppression in the higher frequency area. Only as exception you may also lay the isolation one-sided. Then you only achieve the absorption of the lower frequencies. A one-sided isolation connection may be convenient, if:
  - the conduction of a potential compensating line is not possible.
  - analog signals (some mV respectively µA) are transferred.
  - foil isolations (static isolations) are used.
- With data lines always use metallic or metallised plugs for serial couplings. Fix the isolation of the data line at the plug rack. Do not lay the isolation on the PIN 1 of the plug bar!
- At stationary operation it is convenient to strip the insulated cable interruption free and lay it on the isolation/protected ground conductor line.
- To fix the isolation tangles use cable clamps out of metal. The clamps must clasp the isolation extensively and have well contact.
- Lay the isolation on an isolation rail directly after the entry of the cable in the cabinet.

CAUTION

Please regard at installation!

At potential differences between the grounding points, there may be a compensation current via the isolation connected at both sides.

Remedy: Potential compensation line

2.15 General data for the System SLIO

Conformity and approval		
Conformity		
CE	2014/35/EU	Low Voltage Directive
	2014/30/EU	EMC Directive
RoHS (EU)	2011/65/EU	Restriction of the use of certain hazardous substances in electrical and electronic equipment
UKCA	2016 No. 1101	Electrical Equipment (Safety) Regulations
	2016 No. 1091	Electromagnetic Compatibility Regulations
RoHS (UK)	2012 No. 3032	Use of Certain Hazardous Substances
Approval		
Certifications	-	Refer to technical data

Protection of persons and device protection		
Type of protection	-	IP20
Electrical isolation		
to the field bus	-	electrically isolated
to the process level	-	electrically isolated
Insulation resistance	-	-
Insulation voltage to reference ground		
Inputs / outputs	-	AC / DC 50V, test voltage AC 500V
Protective measures	-	against short circuit

Environmental conditions to EN 61131-2		
Operation		
Horizontal installation hanging	EN 61131-2	0…+60°C
Horizontal installation lying	EN 61131-2	0…+55°C
Vertical installation	EN 61131-2	0…+50°C
Air humidity	EN 60068-2-30	RH1 (without condensation, rel. humidity 10…95%)
Pollution	EN 61131-2	Degree of pollution 2
Installation altitude max.	-	2000m
Mechanical		
Oscillation	EN 60068-2-6	1g, 9Hz ... 150Hz
Shock	EN 60068-2-27	15g, 11ms

Mounting conditions		
Mounting place	-	In the control cabinet
Mounting position	-	Horizontal and vertical

EMC	Standard		Comment
Emitted interference	EN 61000-6-4		Class A (Industrial area)
Noise immunity zone B	EN 61000-6-2		Industrial area
		EN 61000-4-2	ESD 8kV at air discharge (degree of severity 3), 4kV at contact discharge (degree of severity 2)
		EN 61000-4-3	HF field immunity (casing) 80MHz … 1000MHz, 10V/m, 80% AM (1kHz) 1.4GHz ... 6GHz, 3V/m, 80% AM (1kHz)
		EN 61000-4-6	HF conducted 150kHz … 80MHz, 10V, 80% AM (1kHz)
		EN 61000-4-4	Burst
		EN 61000-4-5	Surge[1]

1) Due to the high-energetic single pulses with Surge an appropriate external protective circuit with lightning protection elements like conductors for lightning and overvoltage is necessary.

2.15.1 Use in difficult operating conditions

Without additional protective measures, the products must not be used in locations with difficult operating conditions; e.g. due to:

- *dust generation*
- *chemically active substances (corrosive vapors or gases)*
- *strong electric or magnetic fields*

3 Hardware description

3.1 Properties

054-1DA00

The FM 054-1DA00 integrates a compact motion control solution for direct connection with a power stage with motor. The motion module outputs a specified pulse sequence with RS422 level via differential outputs.

- Pulse train output module
- Operating modes: CW/CCW, PLS/DIR, ENC/SIM
- Motor types:
  - YASKAWA Sigma 5 mini
  - YASKAWA Sigma 5/7
  - YASKAWA A1000, V1000
- 1 channel RS422
- 4 configurable in-/outputs I/O1 ... I/O4

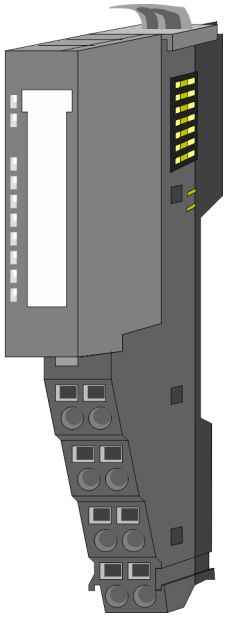

Compatibility list

An overview of CPU and bus coupler, which support the 054-1DA00, can be found at ➦ www.yaskawa.eu.com at the download area of the System SLIO manuals.

Ordering data

Type	Order number	Description
FM 054 Pulse Train	054-1DA00	System SLIO 1xPulseTrain RS422 0 ... 1000kHz, DC 24V, feedback (2DI)

3.2 Structure

054-1DA00

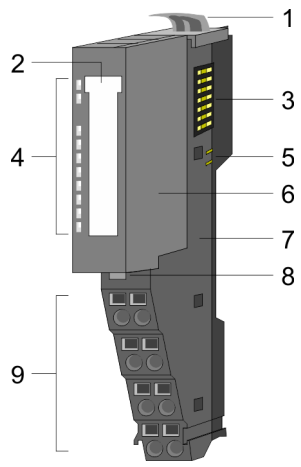

1 Locking lever terminal module
2 Labeling strip
3 Backplane bus
4 LED status indication
5 DC 24V power section supply
6 Electronic module
7 Terminal module
8 Locking lever electronic module
9 Terminal

Connections

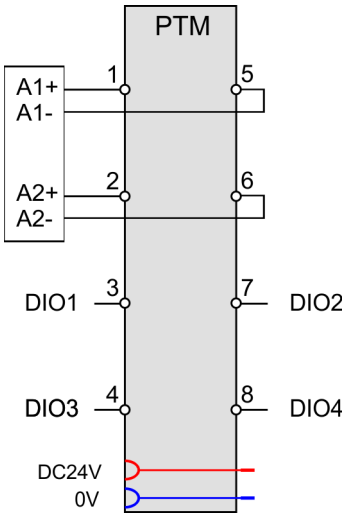

CAUTION

Danger of injury from electrical shock and damage to the unit!

Put the System SLIO in a safe, powered down state before starting installation, disassembly or wiring of the System SLIO modules!

You can use wires with a cross section of 0.08mm² up to 1.5mm². For the connection lines the following requirements apply:

- For the digital I/O connection with DIO operation single lines can be used.
- A power stage must be connected via shielded lines.
- Generally, lines for power supply and signal lines must be laid separately.
- The motion module outputs a specified pulse sequence with RS422 level via differential outputs. The frequency pattern can be specified via the object dictionary.
- The digital connections I/O1...I/O4 are freely configurable via the object dictionary.

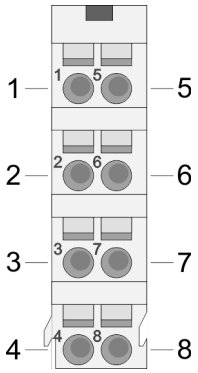

Default assignment

Pos.	Function	Type	*'0x8E00-01 - Pulse train configuration'...page 138*		
			P/D	CW/CCW	A/B
1	A1+	O	P	CW	A
2	A2+	O	D	CCW	B
3	I/O1	I/O	Digital input		
4	I/O3	I/O	Digital input		
5	A1-	O	/P	/CW	/A
6	A2-	O	/D	/CCW	/B
7	I/O2	I/O	Digital input		
8	I/O4	I/O	Digital input		
I: Input, O: Output					

In this module, the state machine emulates the states of the connected power stage. It does not represent its current states. Only by adjusting the DIO signals on the signals of the power stage as e.g. S-ON, ALM-RST, S-RDY and COIN, you can control its states.

'Deployment I/O1...I/O4'...page 86

Assignment for YASKAWA Sigma 5mini via pulse train

Pos.	Function	Type	P/D	CW/CCW	A/B
1	A1+	O	P	CW	A
2	A2+	O	D	CCW	B
3	I/O1	I/O	S-ON: Servo drive On/Off		
4	I/O3	I/O	ALM-RST: Reset Interrupts		
5	A1-	O	/P	/CW	/A
6	A2-	O	/D	/CCW	/B
7	I/O2	I/O	S-RDY: Servo ready		
8	I/O4	I/O	COIN: Position reached		
I: Input, O: Output					

Status indication

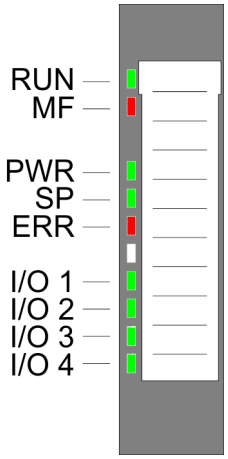

RUN	MF	Description
green	red	
		Bus communication is OK Module status is OK
		Bus communication is OK Module status reports an error
		Bus communication is not possible Module status reports an error
		Error at bus power supply
X		Error in configuration *'Trouble shooting - LEDs'...page 42*

PWR	green		The state of the module is beyond *'Switched on'* and *'Operation enabled'* *'States'...page 67*
			Module is in state *'Switched on'*
			Module is in state *'Operation enabled'*
SP	green		Velocity set point value is 0. In state *'Operation enabled'* there is no reaction of the motor.
			Velocity set point value > 0. In state *'Operation enabled'* there is a reaction of the motor.
ERR	red		No Error
			Warning: 0x80 in *'0x8100-02 - Status word'...page 118*
			Error: 0x08 in *'0x8100-02 - Status word'...page 118*
I/O1	green		Digital input/output 1 has "0" signal
			Digital input/output 1 has "1" signal
I/O2	green		Digital input/output 2 has "0" signal
			Digital input/output 2 has "1" signal
I/O3	green		Digital input/output 3 has "0" signal
			Digital input/output 3 has "1" signal
I/O4	green		Digital input/output 4 has "0" signal
			Digital input/output 4 has "1" signal

not relevant: X

3.3 Block diagram

Structure

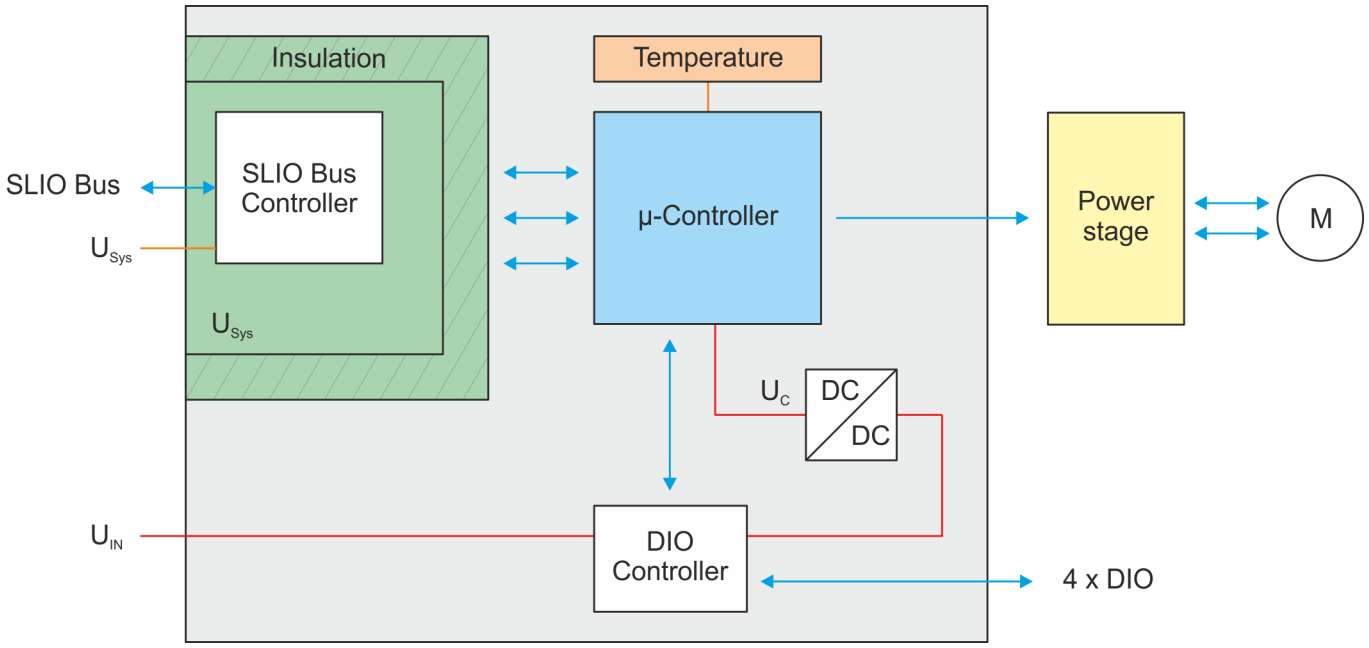

Voltages

U_{Sys} - DC 24V electronic section supply

Power supply for electronic and back plane bus communication

U_{IN} - DC 24V power section supply

Power supply for the I/O area

Area: DC 20.4 ... 28.8V

U_C - DC 3.3V µ-controller supply

The power supply is built via U_{IN} via a DC-DC converter.

ON: Edge 0-1 at 16V from U_{IN}

OFF: Edge 1-0 at 14V from U_{IN}

Temperature monitoring

The motion module has an internal temperature monitoring of the µ-controller. Via the object dictionary limit temperatures can be defined. If the temperature over or under runs the limit values, there is an error reaction of the motion module, which can be configured.
'0x8780-02 - Temperature µ-Controller actual value'...page 137

3.4 Technical data

Order no.	054-1DA00
Type	FM 054 - Motion module
Module ID	0983 6800
Current consumption/power loss	
Current consumption from backplane bus	50 mA
Power loss	1 W
Technical data digital inputs	
Number of inputs	4
Cable length, shielded	1000 m
Cable length, unshielded	600 m
Rated load voltage	-
Current consumption from load voltage L+ (without load)	-
Rated value	DC 20.4...28.8 V
Input voltage for signal "0"	DC 0...5 V
Input voltage for signal "1"	DC 11...28.8 V
Input voltage hysteresis	-
Signal logic input	-
Frequency range	-
Input resistance	-
Input current for signal "1"	3 mA
Connection of Two-Wire-BEROs possible	✓
Max. permissible BERO quiescent current	1.5 mA
Input delay of "0" to "1"	1.5 ms
Input delay of "1" to "0"	1.5 ms
Input filter delay	-
Number of simultaneously utilizable inputs horizontal configuration	4
Number of simultaneously utilizable inputs vertical configuration	4
Input characteristic curve	IEC 61131-2, type 3
Initial data size	4 Bit
Technical data digital outputs	
Number of outputs	4
Cable length, shielded	1000 m
Cable length, unshielded	600 m
Rated load voltage	DC 20.4...28.8 V
Reverse polarity protection of rated load voltage	-
Current consumption from load voltage L+ (without load)	-

Order no.	054-1DA00
Output voltage signal "1" at min. current	L+ (-0 V)
Output voltage signal "1" at max. current	L+ (-125 mV)
Output current at signal "1", rated value	500 mA
Signal logic output	-
Output current at signal "0" max. (residual current)	200 µA
Output delay of "0" to "1"	1.5 ms
Output delay of "1" to "0"	1.5 ms
Minimum load current	-
Lamp load	10 W
Parallel switching of outputs for redundant control of a load	not possible
Parallel switching of outputs for increased power	not possible
Actuation of digital input	✓
Switching frequency with resistive load	max. 300 Hz
Switching frequency with inductive load	max. 0.5 Hz
Switching frequency on lamp load	max. 10 Hz
Internal limitation of inductive shut-off voltage	L+ (-45 V)
Short-circuit protection of output	yes, electronic
Trigger level	1 A
Number of operating cycle of relay outputs	-
Switching capacity of contacts	-
Output data size	-
Status information, alarms, diagnostics	
Status display	green LED per channel
Interrupts	yes, parameterizable
Process alarm	no
Diagnostic interrupt	yes, parameterizable
Diagnostic functions	yes
Diagnostics information read-out	possible
Supply voltage display	green LED
Group error display	red LED
Channel error display	red LED per channel
Datasizes	
Input bytes	36
Output bytes	36
Parameter bytes	56
Diagnostic bytes	20
Isolation	
Between channels	-

Order no.	054-1DA00
Between channels of groups to	-
Between channels and backplane bus	✓
Between areas	-
Max. potential difference between inputs and Mintern (Uiso)	DC 75 V/ AC 50 V
Insulation tested with	AC 500 V
Technical data positioning module	
Number of channels	1
Cable length (motor supply)	-
Input voltage (rated value)	DC 24 V
Input voltage (permitted range)	DC 20.4...28.8 V
Motor current	-
Derating	-
Cable length (motor)	-
Power stage	RS422
Short-circuit protection	✓
Brake chopper	-
PWM frequency	-
Pulse train frequency	1 MHz
Micro steps	-
Steps per rotation	-
Type of encoder	A/B phase 24V single ended
Cable length (encoder)	-
Encoder frequency	100 kHz
Encoder resolution (internal)	24 Bit
Control type	open loop
Temperature sensor controller	✓
Temperature sensor H-bridge	-
Operating modes position functions	
Homing via homing switch	✓
Positioning via torque	-
Positioning without encoder	✓
Positioning with encoder	-
Speed control	✓
Torque control	-
Housing	
Material	PPE / PPE GF10
Mounting	Profile rail 35 mm

Order no.	054-1DA00
Mechanical data	
Dimensions (WxHxD)	12.9 mm x 109 mm x 76.5 mm
Net weight	61 g
Weight including accessories	61 g
Gross weight	76 g
Environmental conditions	
Operating temperature	0 °C to 60 °C
Storage temperature	-25 °C to 70 °C
Certifications	
UL certification	yes
KC certification	yes
UKCA certification	yes
ChinaRoHS certification	yes

4 Deployment

4.1 Basics

General

Open Source license information

- *Open source software is used within the firmware.*
- *You can retrieve the corresponding 'Open Source licence information' via the head module used.*
- *For more details, refer to the 'Open Source Licence Information' in the manual for your head module.*

Addressing

The System SLIO motion module provides its data, such as "Profiling target position" via an object dictionary. In this object dictionary the objects are organized and addressable a unique number consisting of *Index* and *Subindex*. The number is specified as follows:

0x	Index (hexadecimal)	-	Subindex (decimal)
Example: 0x8400-03			

To improve the structure and for expansion at System SLIO Motion Module another object numbering (index-assignment) is used besides the standard CiA 402.

Index area

By separating into index and subindex a grouping is possible. The individual areas are divided into groups of related objects. With the System SLIO motion module this object directory is structured as follows:

Index area	Content
0x1000 up to 0x6FFF	General data and system data
0x7000 up to 0x7FFF	Data of the digital input and output part
0x8000 up to 0x8FFF	Data of the axis

Each object has a subindex 0. Calling an object with subindex 0, the number of available subindexes of the corresponding object is returned.

Accessing the object dictionary

You have the following options for accessing the objects in the object dictionary:

- Access via *'Acyclic channel'...page 92*
  - Any access to the object dictionary is acknowledged by the motion module.
- Access via I/O area
  - The main objects are mapped in the I/O area.
  - The mapping cannot be changed.
  - *'In-/Output area'...page 90*

Please note if you write via the Acyclic channel to objects, which are mapped in the I/O area, their values will be overwritten again with the next cycle. Therefore, data mapped in the I/O area should not be written via the Acyclic channel!

Overview

The motion module uses 36byte input and 36byte output data.

Head module	Backplane bus	Motion module	
CPU respectively bus coupler	→	Process data	Acyclic channel
	←	36byte	

The data exchange with the motion module must be consistent across the 36 bytes! It is recommended to control it via the process image.

4.1.1 Pulse train module

Frequency pattern

The FM 054-1DA00 integrates a compact motion control solution for direct connection with a power stage with motor. The motion module outputs a specified pulse sequence with RS422 level via differential outputs to the power stage. A feedback of the position from the power stage back to the motion module does not take place. For output you can preset the following frequency pattern via the object *'0x8E00-01 - Pulse train configuration'...page 138*:

- Pulse and direction (P/D)
- Frequency modulation (CW/CCW)
- Incremental encoder simulation (A/B)

Pulse and direction (P/D)

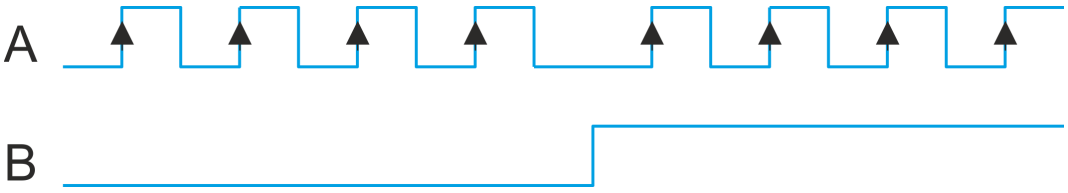

- 0x8E00-01 = 1
- The output of the frequency pattern happens by output A1 (P)
- The direction of rotation marks A2 (D) with "high" level for clockwise and "low" level for counter-clockwise rotation.

Frequency modulation (CW/CCW)

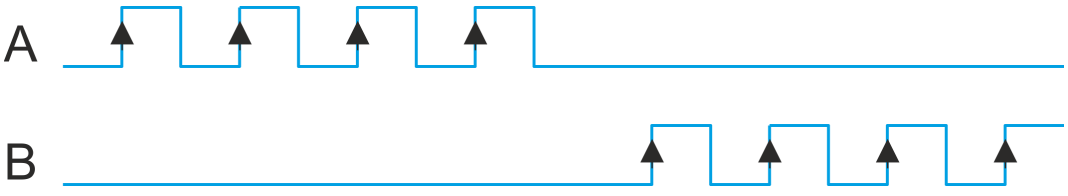

- 0x8E00-01 = 2
- With clockwise rotation the frequency signal is output at A1 (CW) respectively counter-clockwise rotation at A2 (CCW).
- The inactive channel is always at logic "low".

Incremental encoder simulation (A/B)

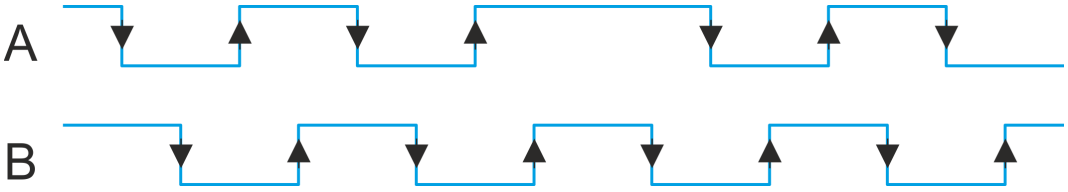

- 0x8E00-01 = 3
- Signal corresponds to the signal of an incremental encoder. By direct connection to a power stage synchronous axes in the master/slave structure can be realized.
- A1 (A) and A2 (B) output a phase-shifted by 90° signal.
- The shift from A1 to A2 is positive for clockwise rotation and negative for counter-clockwise rotation.

4.1.2 Structure of a positioning control

Structure

The figure below shows the structure of a typical positioning control

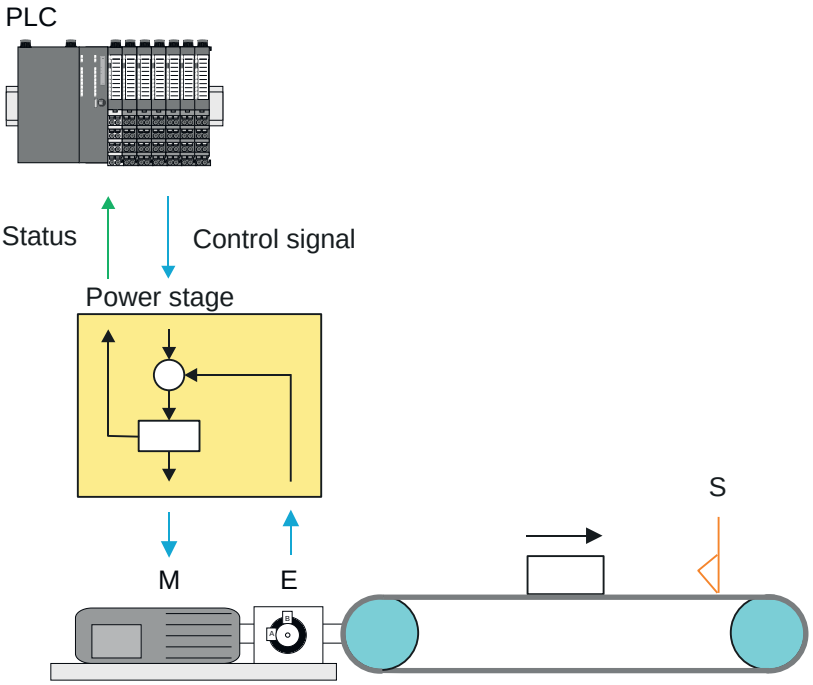

PLC Superordinate head module respectively controller.
M Stepper motor
E Encoder
S Software limit switch

Control

The *Control* consists of the PLC with the user program for the processing and the motion module to control the power stage. The control of the power stage happens via RS422 signals. You can define a software limit switch in the motion module and react in the user program on the overrun.

Power stage with motor

The power stage receives from the motion module the corresponding control commands and controls automatically the connected motor. A *motor* is a engine for high-precision positioning. Motor and power stage are to be harmonized

CAUTION

Please provide for track limits (general position limit) respectively to avoid damages besides software limit switch hardware limit switches and also consider this in your safety concept.

Encoder

- The encoder respectively rotation encoder provides the controller with the position of the motor by means of digital signals. This can accordingly be evaluated by the PLC.
- The encoder respectively rotation encoder supply a certain number of pulses per revolution.
- The value generation is done by counting the pulses.

4.2 Commissioning

4.2.1 Installation

1. Build your System SLIO and connect it. *'Basics and mounting'...page 11*.
2. Connect your drive. *'Connecting a power stage'...page 64*

4.2.2 Inspections and tests before the test operation

Preparation

Please check the following items, and take appropriate measures in the event of an error, before you start the test operation.

- Are all wiring and connections correct?
- Are all nuts and bolts at the drive properly tightened?
- For a motor with oil seal: Is the seal not damaged and is the motor lubricated? Please always regard the start-up instructions of your motor!

4.2.3 Start-up of the System SLIO motion module

Preparation

Please check the following items, and take appropriate measures in the event of an error, before you start the test operation.

- Check the correct setting of the set points for the drive and the I/O signals from the superordinate control.
- Check wiring between the superordinate control and your drive as well as the polarity of the wires.
- Check all operational settings of your drive.

Setting the limits

Set the respective system limits, the system behavior and characteristics in the object dictionary via the *Acyclic channel* 92. These are e.g.:

- Behavior at quick stop and on error
- Velocity limit values
- Position limitations
- Assignment of the digital inputs and outputs

Steps of commissioning

Always adapt parameters to the operating mode!

Please ensure that the module always has the correct parameters according to the selected operating mode!

Start parameter

- *'Start - Start parameter homing'...page 69*
- *'Start - Start parameter PtP position profile'...page 74*
- *'Start - Start parameter velocity profile'...page 84*

1. Perform for your System SLIO and your motion module a hardware configuration and create your application program.

2. Enter the parameters that are to be loaded at start-up in the motion module. Otherwise you can parametrize during operation via the *Acyclic channel*.

3.

Power supply

The module is to be power supplied with the both DC 24V voltages power section supply I/O area and electronic power supply. When commissioning these may simultaneously or electronic power supply must be switched on first. When commissioning these may simultaneously or power section supply I/O area must be switched on first. *'Standard wiring'...page 33*

Transfer your project into your CPU.

4. Set the power stage in operation.

The settings in the power stage to be controlled are important for the safe and proper operation of your drive. More information may be found in the manual of the power stage.

5. Thus, the signals are scaled correctly at the power stage, you need to set a transmission ratio of the power stage.
6. Switch your CPU to RUN state.
7. Switch on the drive.

   ➥ Your system is now ready for communication and you can establish parameter setting via the *Acyclic channel*.

8. Send the command "Shutdown".

   Bit 3...0: x110 *'0x8100-01 - Control word'...page 117*

   ➥ The motion module shows the state *'Ready to switch on'*.

9. Send the command "Switch on".

   Bit 3...0: 0111 *'0x8100-01 - Control word'...page 117*

   ➥ The motion module shows the state *'Switched on'*.

10. Reset by edge 0-1 of bit 7 in *'0x8100-01 - Control word'...page 117* a previously encountered possible error.
11. Send the command "Enable operation".

    Bit 3...0: 1111 *'0x8100-01 - Control word'...page 117*

    ➥ The motion module shows the state *'Operation enabled'*. The drive is now ready for your move commands.

Application example *'Example: 054-1DA00 with YASKAWA Sigma 5 mini'...page 100*

4.3 Connecting a power stage

4.3.1 Connection options

Connections

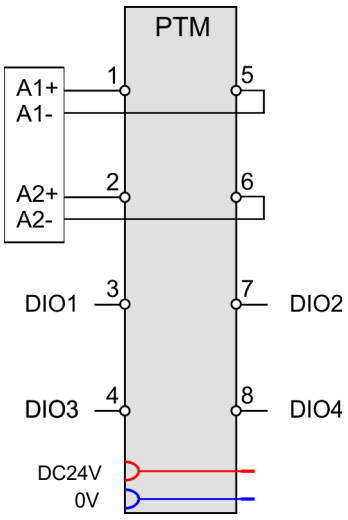

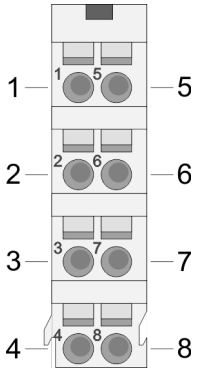

CAUTION

Danger of injury from electrical shock and damage to the unit!

Put the System SLIO in a safe, powered down state before starting installation, disassembly or wiring of the System SLIO modules!

You can use wires with a cross section of 0.08mm² up to 1.5mm². For the connection lines the following requirements apply:

- For the digital I/O connection with DIO operation single lines can be used.
- A power stage must be connected via shielded lines.
- Generally, lines for power supply and signal lines must be laid separately.
- The motion module outputs a specified pulse sequence with RS422 level via differential outputs. The frequency pattern can be specified via the object dictionary.
- The digital connections I/O1...I/O4 are freely configurable via the object dictionary.

Default assignment

Pos.	Function	Type	*'0x8E00-01 - Pulse train configuration'...page 138*		
			P/D	CW/CCW	A/B
1	A1+	O	P	CW	A
2	A2+	O	D	CCW	B
3	I/O1	I/O	Digital input		
4	I/O3	I/O	Digital input		
5	A1-	O	/P	/CW	/A
6	A2-	O	/D	/CCW	/B
7	I/O2	I/O	Digital input		
8	I/O4	I/O	Digital input		
I: Input, O: Output					

In this module, the state machine emulates the states of the connected power stage. It does not represent its current states. Only by adjusting the DIO signals on the signals of the power stage as e.g. S-ON, ALM-RST, S-RDY and COIN, you can control its states.

'Deployment I/O1...I/O4'...page 86

Assignment for YASKAWA Sigma 5mini via pulse train

Pos.	Function	Type	P/D	CW/CCW	A/B
1	A1+	O	P	CW	A
2	A2+	O	D	CCW	B
3	I/O1	I/O	S-ON: Servo drive On/Off		
4	I/O3	I/O	ALM-RST: Reset Interrupts		
5	A1-	O	/P	/CW	/A
6	A2-	O	/D	/CCW	/B
7	I/O2	I/O	S-RDY: Servo ready		
8	I/O4	I/O	COIN: Position reached		
I: Input, O: Output					

4.4 Drive profile

4.4.1 Overview

Drive profile *CiA 402*

- The System SLIO motion module FM 054-1DA00 is based largely on the drive profile *CiA 402*.
- The drive profile *CiA 402* defines state machine, operating modes and objects (parameters) of components for the drive technology.
- Here significant objects for control and evaluation of the state machine are *Control word*, *Status word* and *Operation mode*.
- Further object serve for configuration and diagnostics of the motion module.
- All the object are summarized in *'Object dictionary'...page 106*.
- The most important objects can be found in *'In-/Output area'...page 90*.
- The access of the objects during runtime happens via *'Acyclic channel'...page 92*.

Term definitions

State machine	- The motion module has a state machine implemented. The status of the state machine can be controlled by means of commands.
State change	- The relevant command or any errors cause a state change.
State	- The state is the current state of the state machine. Via the *Status word* *'0x8100-02 - Status word'...page 118* you can access the state. Here the state is output via appropriate combinations of bits.
Command	- For triggering of state transitions, certain combinations of bits must be set in the *Control word* *'0x8100-01 - Control word'...page 117*. Such a combination is called *Command*.

Addressing

The System SLIO motion module provides its data, such as "Profiling target position" via an object dictionary. In this object dictionary the objects are organized and addressable a unique number consisting of *Index* and *Subindex*. The number is specified as follows:

0x	Index (hexadecimal)	-	Subindex (decimal)
Example: 0x8400-03			

To improve the structure and for expansion at System SLIO Motion Module another object numbering (index-assignment) is used besides the standard CiA 402.

4.4.2 States

State machine according to CiA 402

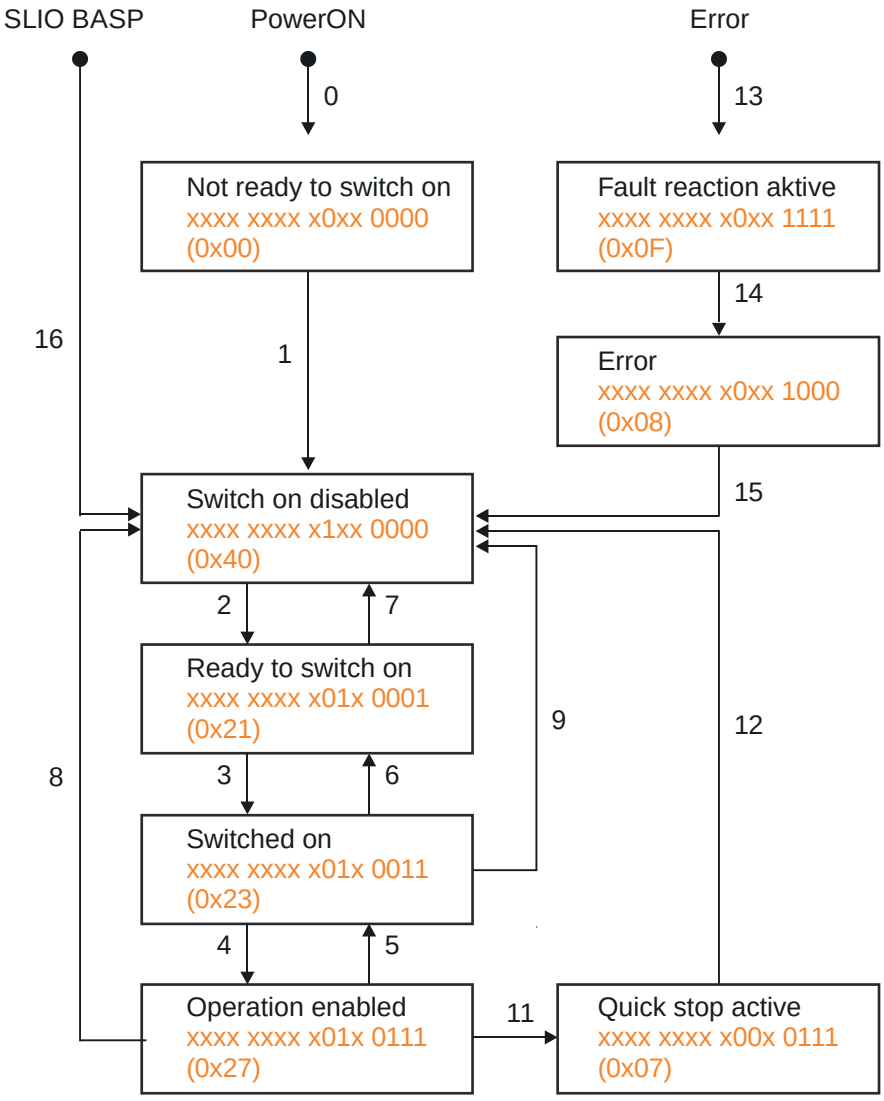

	Transition by:
0,1	Device start-up and self-test after PowerON
13	Drive or communication error
14	Internal fault reaction
16	Disabling command output disable (BASP)
	'0x8100-01 - Control word'...page 117:
2,6	Bit 3...0: x110: Command "Shutdown"
3	Bit 3...0: 0111: Command "Switch on"
4	Bit 3...0: 1111: Command "Enable operation". According to CiA 402 the automatic transition from *Ready to switch on* to *Operation enabled* is possible.
5	Bit 3...0: 0111: Command "Disable operation"
11	Bit 3...0: x01x: Command "Quick stop"
7,8,9,12	Bit 3...0: xx0x: Command "Disable voltage"
15	Bit 7: Edge 0-1: Command "Fault reset"

In this module, the state machine emulates the states of the connected power stage. It does not represent its current states. Only by adjusting the DIO signals on the signals of the power stage as e.g. S-ON, ALM-RST, S-RDY and COIN, you can control its states.

'Deployment I/O1...I/O4'...page 86

Accessing the state machine

At CiA 402 the total control is realized via the following two objects. Both objects are mapped in the cyclic data exchange:

'0x8100-01 - Control word'...page 117	→	State machine	→	*'0x8100-02 - Status word'...page 118*

4.4.3 Operating modes

4.4.3.1 Overview

Operating modes

The communication takes place via the I/O area. The main data of the object dictionary are mapped into the I/O area.

'In-/Output area'...page 90

The objects, which are not mapped, can be accessed by the *Acyclic channel*.

'Acyclic channel'...page 92

The following modes according to the device profile CiA 402 are available:

- *'Homing'...page 69*
- *'PtP positioning profile'...page 73*
- *'Velocity profile'...page 83*

Application data

In addition to the control parameters you have to specify the data from your application, consisting of the nominal drive data and scaling.

'0x8180-02 - Gear factor'...page 123	→	Application data
'0x8E00-02 - Pulse train pulses per revolution'...page 139	→	

4.5 Homing

Overview

Here you will find information on how the System SLIO motion module searches the *reference position*. The reference position is also called "basic position", "start position" or "home position". *Homing* is an initialisation drive of an axis, where the correct position is determined by means of an reference signal. This process is called "referencing", "home drive" or "homing". When referencing you can determine velocity, acceleration, deceleration and type of homing. The FM 054-1DA00 supports the following homing types:

- *'Homing by means of a homing switch'...page 70*
- *'Homing to actual position'...page 72*

Start - Start parameter homing

Please note:

- *'Commissioning'...page 62*
- *'Application data'...page 68*

'0x8280-01 - Operating mode requested'...page 125 6: Homing mode (*'0x8280-02 - Operating mode actual'...page 125*)	→	Homing	→	*'0x8100-02 - Status word'...page 118* *'0x8280-02 - Operating mode actual'...page 125*
'0x8300-02 - Homing method'...page 126				
'0x8300-03 - Homing digital input I/O1…I/O4'...page 126				
'0x8300-04 - Homing digital input active polarity I/O1…I/O4'...page 127				
'0x8300-05 - Homing target position'...page 127				
'0x8300-06 - Homing velocity V1'...page 127				
'0x8300-07 - Homing velocity V2'...page 128				
'0x8300-08 - Homing acceleration'...page 128				
'0x8300-09 - Homing deceleration'...page 128				
'0x8300-10 - Homing offset value'...page 128				

4.5.1 Homing by means of a homing switch

Homing by means of a homing switch

- Homing can only be accessed from the *PtP positioning profile* mode.
- The *target position* is the reference position, which is maximally moved to. This is to be specified with sign.
- The homing happens according to the following steps:
  - It is traversed with the high *velocity V1* toward the target position *T* until the homing switch *R* is overrun.
  - Then it is decelerated and traversed in the opposite direction with *velocity V1*.
  - If the homing value *R* is overrun again, it is again decelerated and it is again accelerated in the positive direction with slower *velocity V2*.
  - With the next overrun of the homing switch the reference position *R* is set and moved to with *velocity V2*.
- Use To connect the home switch one of the digital inputs of the motion module and specify the polarity of the switch with the parametrization.

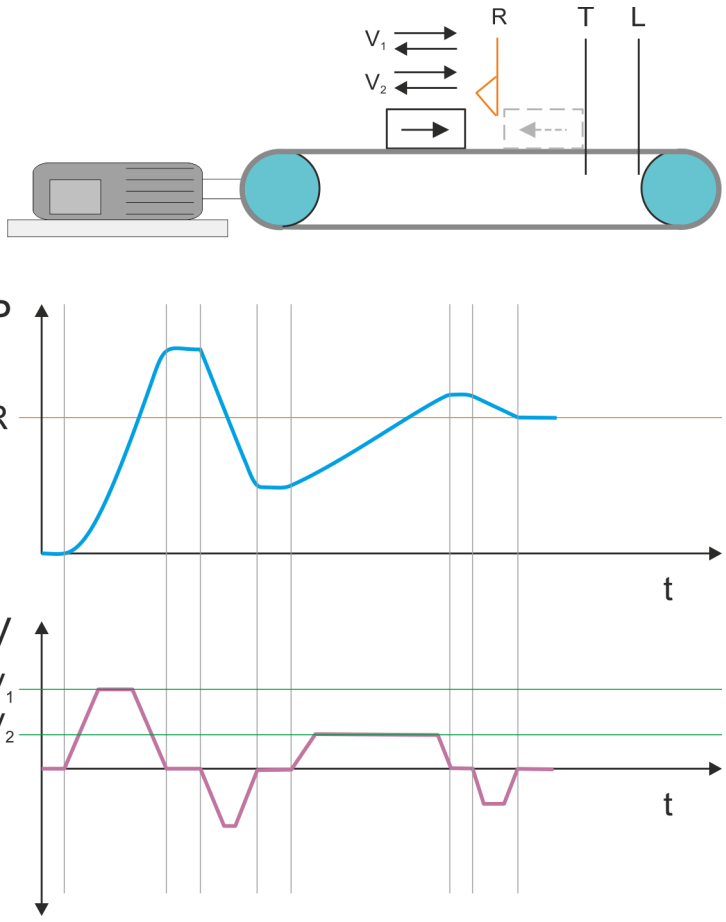

V_1 High velocity
V_2 Low velocity
R Homing switch respectively homing value
T Target position
L General position limit

Proceeding

1. For commissioning *'Commissioning'...page 62*

   Homing objects *'Homing - 0x8300'...page 125*

2. ■ Switch the state machine to state *'Switch on disabled'* *'States'...page 67*
   - Send the command "Disable voltage"
     '0x8100-01 - Control word'...page 117 Bit 3...0: xx0x:

   ➡ The motion module shows the state *'Switch on disabled'*.

3. Set the following parameters:
   - ■ *'0x8300-02 - Homing method'...page 126*
     - Enter the value 17.
   - ■ *'0x8300-03 - Homing digital input I/O1…I/O4'...page 126*
     - Select the input to which the homing switch is connected.
   - ■ *'0x8300-04 - Homing digital input active polarity I/O1…I/O4'...page 127*
     - Define the polarity of the switch
   - ■ *'0x8300-05 - Homing target position'...page 127*
     - Define by specifying a target position the maximum axis movement path, that during movement the homing switch is passed over.
   - ■ *'0x8300-06 - Homing velocity V1'...page 127*
     - Specify the high velocity for the movement to the homing switch.
   - ■ *'0x8300-07 - Homing velocity V2'...page 128*
     - Specify the low velocity for the movement to the homing switch.
   - ■ *'0x8300-08 - Homing acceleration'...page 128*
     - Specify the acceleration for homing.
   - ■ *'0x8300-09 - Homing deceleration'...page 128*
     - Specify the deceleration for homing.
   - ■ *'0x8300-10 - Homing offset value'...page 128*
     - If necessary specify an offset for the homing position.

4. ■ *'0x8400-03 - Positioning profile target velocity'...page 129*
   - Enter the value 0.

5. ■ Switch your motion module to the *Positioning* mode. *'0x8280-01 - Operating mode requested'...page 125*
   - Enter the value 1.

6. Send the command "Shutdown"

   '0x8100-01 - Control word'...page 117 Bit 3...0: x110:

   ➡ The motion module shows the state *'Ready to switch on'*.

7. Send the command "Switch on".

   '0x8100-01 - Control word'...page 117 Bit 3...0: 0111

   ➡ The motion module shows the state *'Switched on'*.

8. Send the command "Enable operation".

   '0x8100-01 - Control word'...page 117 Bit 3...0: 1111

   ➡ The motion module shows the state *'Operation enabled'*. The drive is now ready for your move commands.

9. ■ Switch your motion module to the *Homing* mode. *'0x8280-01 - Operating mode requested'...page 125*
   - Enter the value 6.

   ➡ The drive starts homing. Upon completion of the homing, the position of the reference switch is used as the reference point.

4.5.2 Homing to actual position

Proceeding

1. For commissioning *'Commissioning'...page 62*

   Homing objects *'Homing - 0x8300'...page 125*

2. ■ Switch the state machine to state *'Switch on disabled''States'...page 67*
   - Send the command "Disable voltage"
     '0x8100-01 - Control word'...page 117 Bit 3...0: xx0x:

   ➡ The motion module shows the state *'Switch on disabled'*.

3. Set the following parameters:
   - ■ *'0x8300-02 - Homing method'...page 126*
     - Enter the value 37.
   - ■ *'0x8300-10 - Homing offset value'...page 128*
     - If necessary specify an offset for the homing position.

4. ■ *'0x8400-03 - Positioning profile target velocity'...page 129*
   - Enter the value 0.

5. ■ Switch your motion module to the *Positioning* mode. *'0x8280-01 - Operating mode requested'...page 125*
   - Enter the value 1.

6. Send the command "Shutdown"

   '0x8100-01 - Control word'...page 117 Bit 3...0: x110:

   ➡ The motion module shows the state *'Ready to switch on'*.

7. Send the command "Switch on".

   '0x8100-01 - Control word'...page 117 Bit 3...0: 0111

   ➡ The motion module shows the state *'Switched on'*.

8. Send the command "Enable operation".

   '0x8100-01 - Control word'...page 117 Bit 3...0: 1111

   ➡ The motion module shows the state *'Operation enabled'*. The drive is now ready for your move commands.

9. ■ Switch your motion module to the *Homing* mode.
   '0x8280-01 - Operating mode requested'...page 125
   - Enter the value 6.

   ➡ *'0x8300-10 - Homing offset value'...page 128* is used directly as actual position in *'0x8480-02 - Position actual value'...page 130*.

4.6 PtP positioning profile

Overview

Always adapt parameters to the operating mode!

Please ensure that the module always has the correct parameters according to the selected operating mode!

Start parameter

- *'Start - Start parameter homing'...page 69*
- *'Start - Start parameter PtP position profile'...page 74*
- *'Start - Start parameter velocity profile'...page 84*

With the PtP positioning profile, you can move to target positions by specifying profile velocity, profile acceleration and profile deceleration. Here, the limits for velocity and maximum traversing position are always be considered. Due to changes of values are immediately used and activated, "on the fly" changes of the move process are possible.

- Changes in acceleration respectively deceleration are directly used with the profile generation.
- Deceleration and reversing is automatically executed when a new target position requires a change of direction. A separated activation by starting the job in the *control word* is not necessary.
- If a specified target position is reached or a limit is activated during the traversing, this is indicated in *'0x8100-02 - Status word'...page 118*.
- The System SLIO motion module works in a controlled mode. Here, the position and velocity control loop are open and there is no evaluation of the encoder feedback.
- Current values of position, velocity, acceleration and deceleration are calculated by the System SLIO motion module itself.

Structure

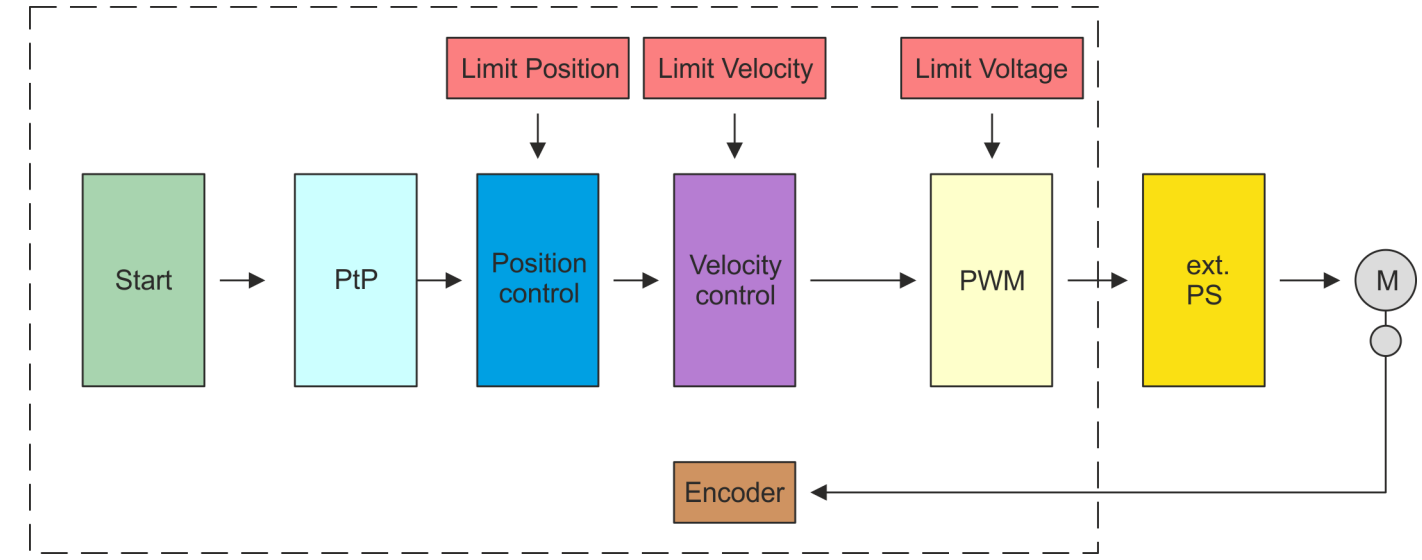

Start: Start parameters
Limit Position: Limitation position
Limit Velocity: Limitation velocity
Limit Voltage: Limitation voltage
PtP: PtP positioning profile
Position control: Position controller
Velocity control: Speed controller
PWM: PWM stage
ext. PS: External power stage
M: Motor and encoder
Encoder: Encoder current value

Start - Start parameter PtP position profile

Please note:

- *'Commissioning'...page 62*
- *'Application data'...page 68*

'0x8280-01 - Operating mode requested'...page 125 1: PtP positioning profile (*'0x8280-02 - Operating mode actual'...page 125*)	→	Start:	→	PtP Positionsprofil Generator
'0x8400-03 - Positioning profile target velocity'...page 129				
'0x8400-04 - Positioning profile target acceleration'...page 129				
'0x8400-05 - Positioning profile target deceleration'...page 129				
'0x8F00-01 - Encoder feedback configuration'...page 142				

PtP - positioning profile

Start	→	PtP	→	Position control Position controller *'0x8100-02 - Status word'...page 118*
'0x8400-03 - Positioning profile target velocity'...page 129				
'0x8400-04 - Positioning profile target acceleration'...page 129				
'0x8400-05 - Positioning profile target deceleration'...page 129				
'0x8F00-02 - Encoder actual value'...page 142				

Limit Position - Limitation position

'0x8400-02 - Positioning profile target position'...page 129	→	Limit Position	→	Position control Position controller
'0x8480-05 - Software position limit positive direction'...page 130				
'0x8480-06 - Software position limit negative direction'...page 131				
'0x8480-07 - Range limit positive direction'...page 131				
'0x8480-08 - Range limit negative direction'...page 131				
'0x8580-04 - Acceleration limit'...page 134				
'0x8580-06 - Deceleration limit'...page 134				

Position control - Position controller

Limit Position Limitation position	→	Position control	→	Velocity control Drehzahlregler
PtP Positioning profile generator				
'0x8480-09 - In-position window'...page 132				
'0x8F00-02 - Encoder actual value'...page 142				

Limit Velocity - Limitation velocity

'0x8500-04 - Velocity control limit positive direction'...page 133	→	Limit Velocity	→	Velocity control Speed controller
'0x8500-05 - Velocity control limit negative direction'...page 133				
'0x8580-04 - Acceleration limit'...page 134				
'0x8580-06 - Deceleration limit'...page 134				

Velocity control - Speed controller

Limit Velocity Limitation velocity	→	Velocity control	→	PWM PWM stage
Position control				
'0x8500-01 - Velocity control configuration'...page 132				
'0x8500-03 - Velocity control target value'...page 133				
'0x8580-03 - Deceleration quick stop value'...page 134				
'0x8F00-01 - Encoder feedback configuration'...page 142				

Limit Voltage - Limitation voltage

'0x8680-04 - Power section supply voltage min. warning level'...page 135 *'0x8680-05 - Power section supply voltage max. warning level'...page 135* *'0x8680-06 - Power section supply voltage min. error level'...page 135* *'0x8680-07 - Power section supply voltage max. error level'...page 135*	→	Limit Voltage	→	PWM PWM stage

PWM - PWM stage

Limit Voltage Velocity control Drehzahlregelung	→	PWM	→	ext. PS external power stage

Ext. PS - External power stage, motor, encoder

PWM PWM stage	→	ext. PS	→ ←	Motor Encoder *'0x8F00-02 - Encoder actual value'...page 142*
				'0x8680-02 - Power section supply voltage actual value'...page 135

4.6.1 Examples

Symmetrical acceleration and deceleration with reaching the target velocity

- Setting
  - Target position
  - Profile velocity
  - Profile acceleration
  - Profile deceleration
- Target velocity is reached.
- Specifying a new target position as starting position.

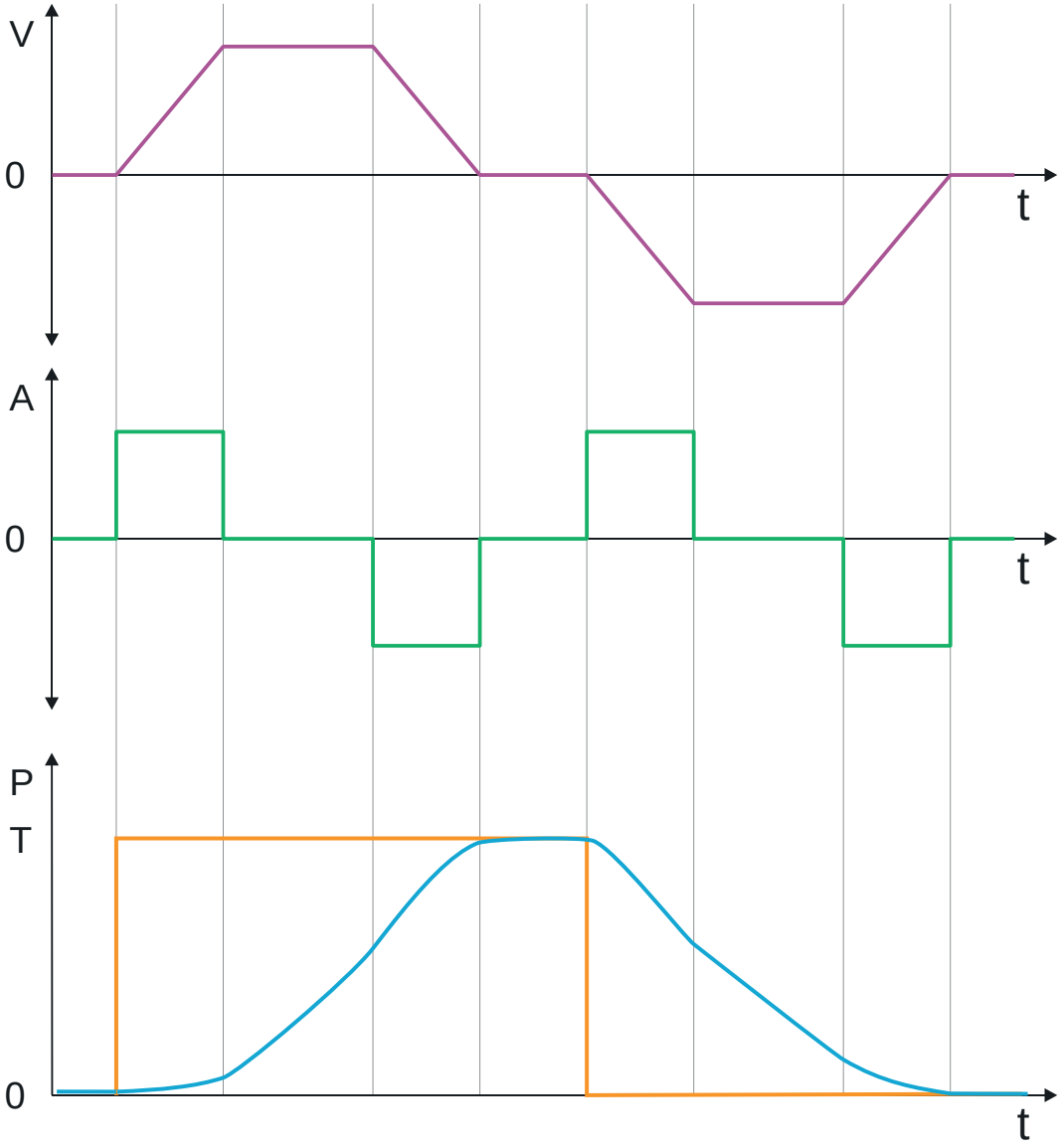

V Velocity
A Acceleration
P Position
T Target position
t Time line

Symmetrical acceleration and deceleration without reaching the target velocity

- Setting
  - Target position
  - Profile velocity
  - Profile acceleration
  - Profile deceleration
- Target velocity is not reached, since before deceleration is initiated to reach the target position.
- Specifying a new target position as starting position.

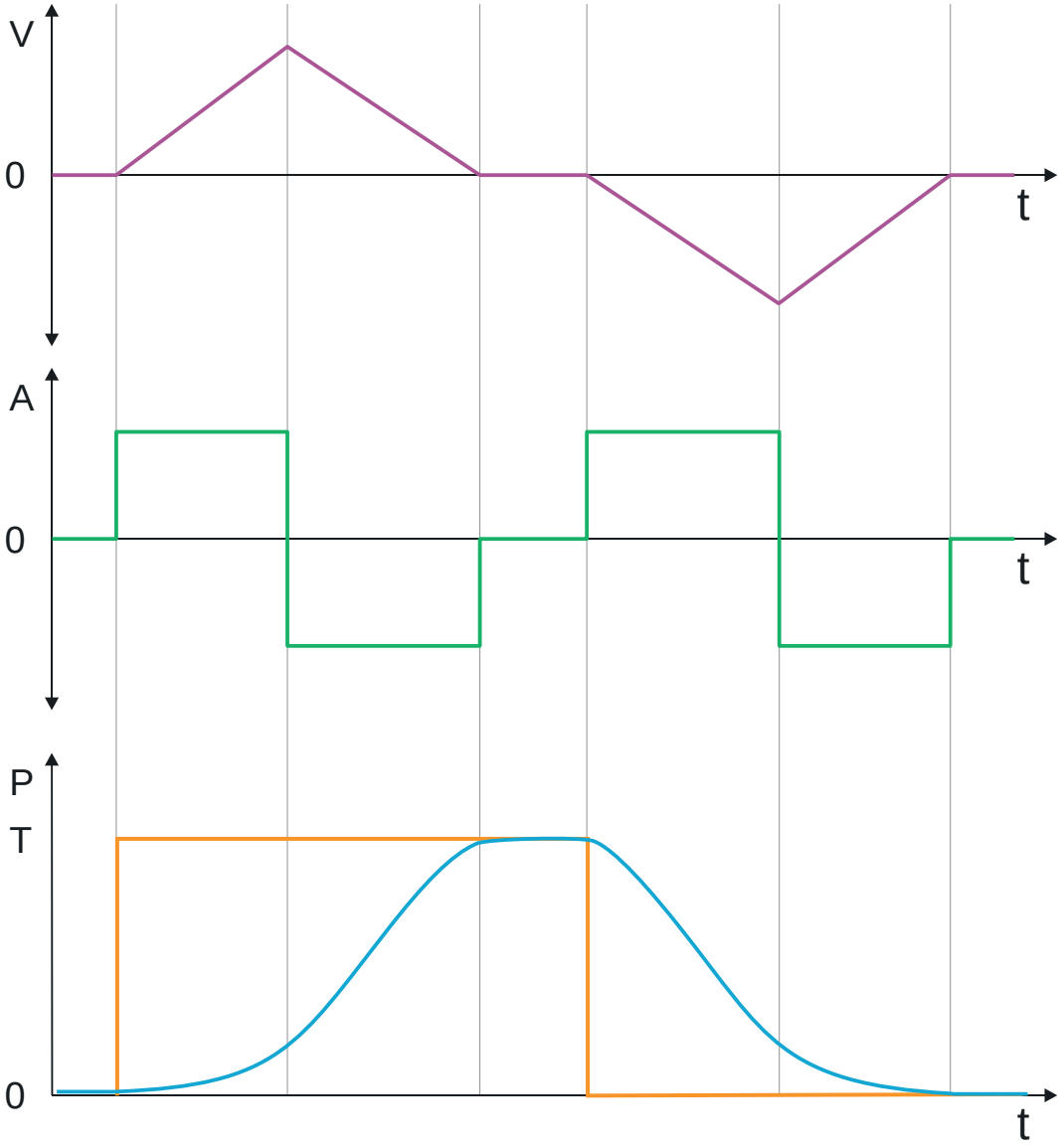

V Velocity
A Acceleration
P Position
T Target position
t Time line

Asymmetrical acceleration and deceleration with reaching the target velocity

- Setting
  - Target position
  - Profile velocity
  - Profile acceleration
  - Profile deceleration
- Target velocity is reached.
- Specifying a new target position as starting position.

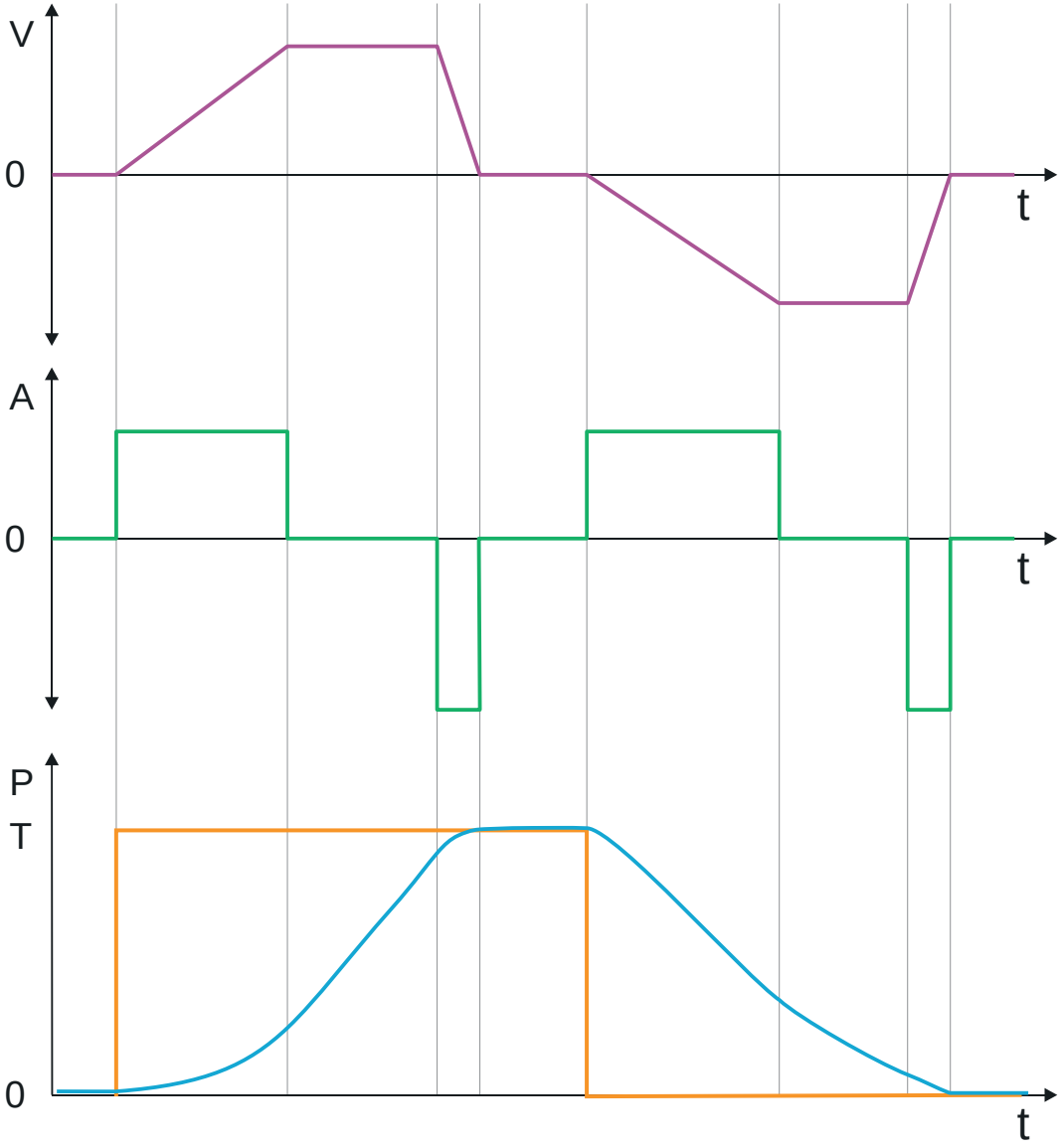

V Velocity
A Acceleration
P Position
T Target position
t Time line

Asymmetrical acceleration and deceleration with reducing the acceleration during the move

- Setting
  - Target position
  - Profile velocity
  - Profile acceleration
  - Profile deceleration
- Target velocity is reached.
- Specifying a new target position as starting position.

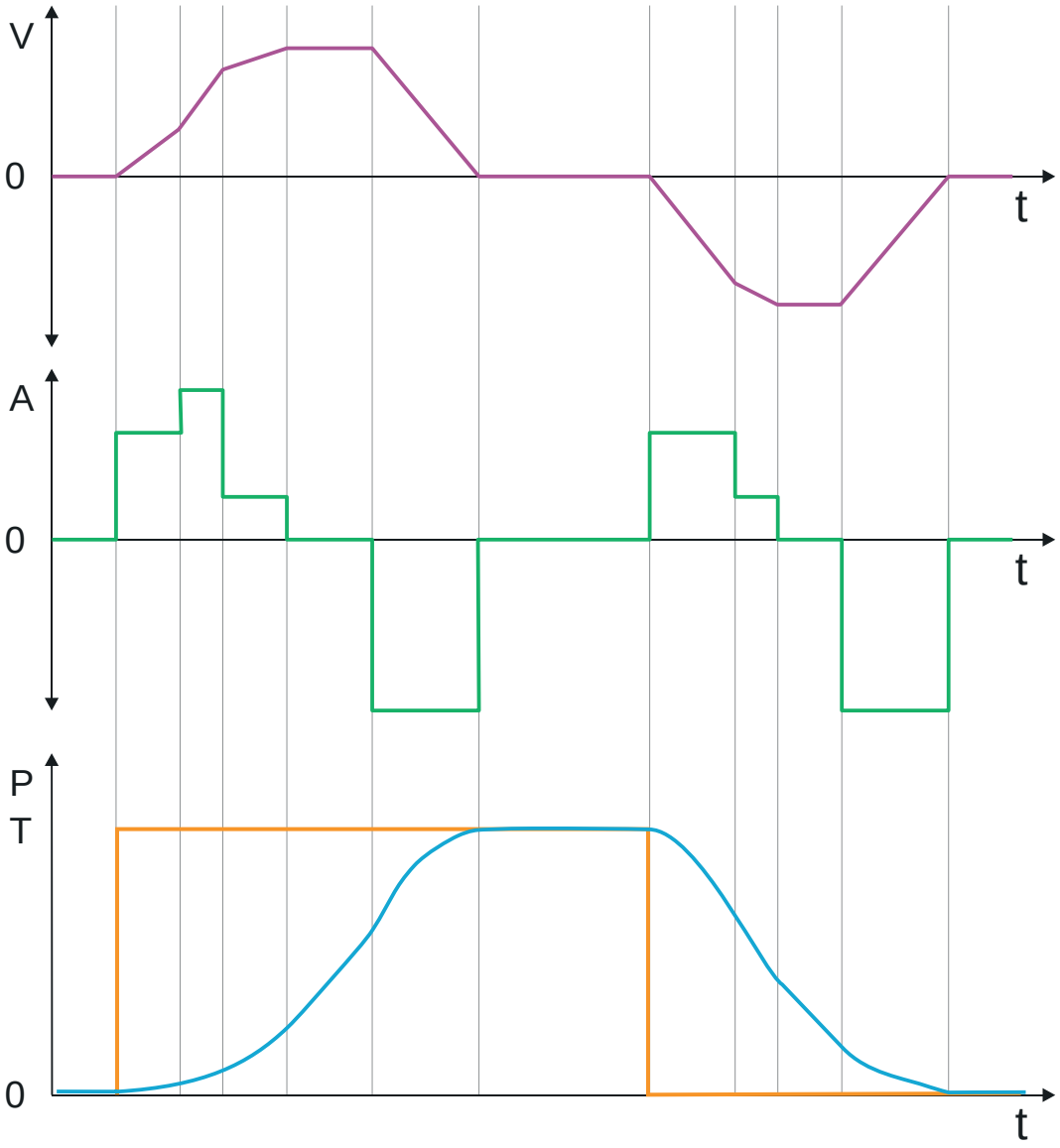

V Velocity
A Acceleration
P Position
T Target position
t Time line

Symmetrical acceleration and deceleration with reaching the target velocity

- Setting
  - Target position
  - Profile velocity
  - Profile acceleration
  - Profile deceleration
- Target velocity is reached.
- Specifying a new target position as starting position during deceleration.

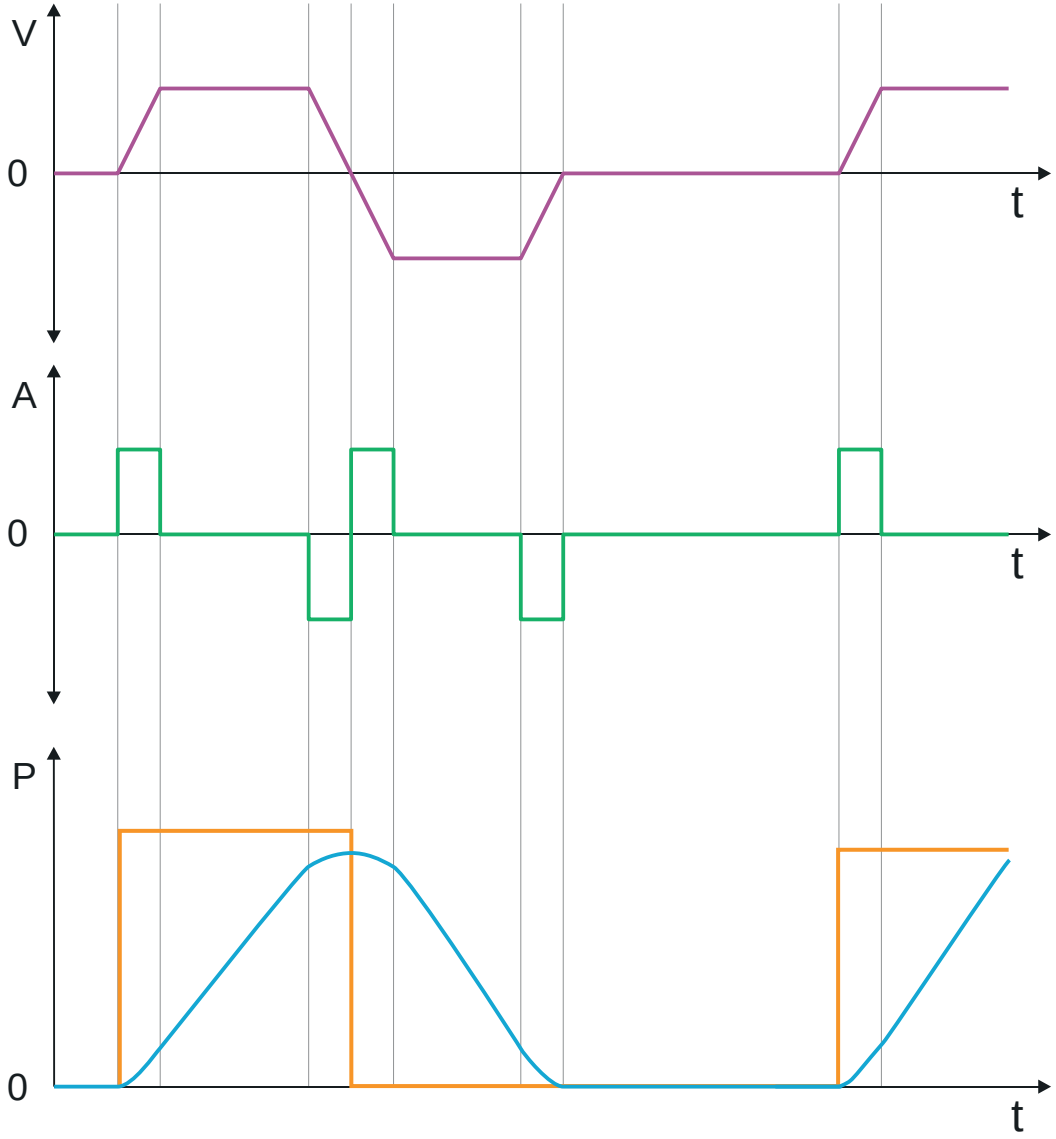

V Velocity
A Acceleration
P Position
T Target position
t Time line

Symmetrical acceleration and deceleration with specifying a target position four times

- Setting
  - Target position
  - Profile velocity
  - Profile acceleration
  - Profile deceleration
- Target velocity is reached.
- Four times setting a new target position after the previous target position was reached.

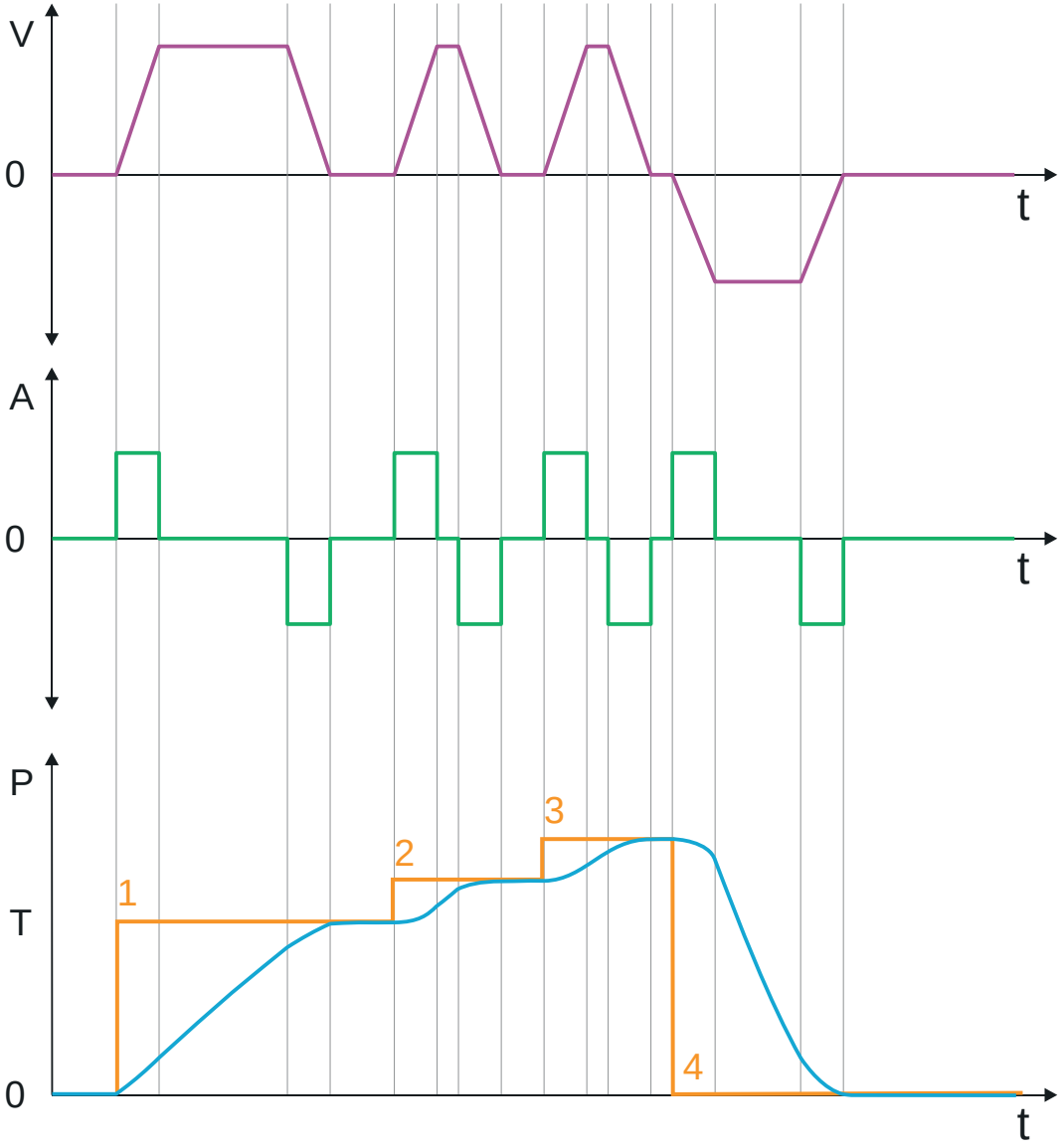

V Velocity
A Acceleration
P Position
T Target position (1 ... 4)
t Time line

4.7 Velocity profile

Structure

Always adapt parameters to the operating mode!

Please ensure that the module always has the correct parameters according to the selected operating mode!

Start parameter

- *'Start - Start parameter homing'...page 69*
- *'Start - Start parameter PtP position profile'...page 74*
- *'Start - Start parameter velocity profile'...page 84*

In the operation mode *Velocity profile* the velocity is output according to profile acceleration and profile deceleration until the target velocity is reached. This operation mode bases on the *PtP positioning profile*, except that position settings such as target and limit values have no effect. With this object *'0x8500-01 - Velocity control configuration'...page 132*, you can specify the frequency pulse patterns.

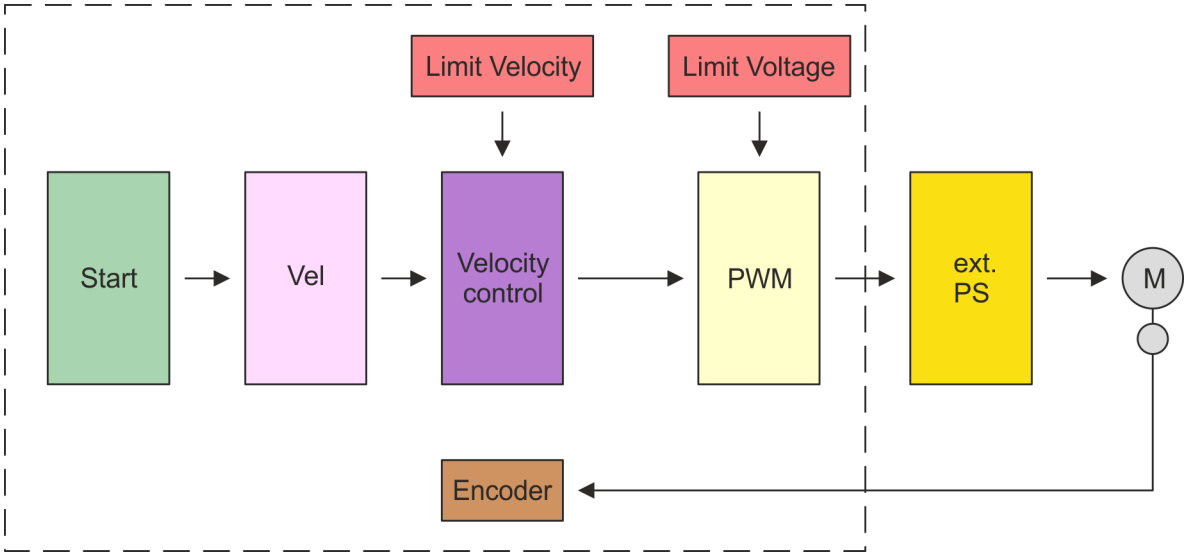

Start: Start parameters
Limit Velocity: Limitation velocity
Limit Voltage: Limitation voltage
Vel: Velocity profile
Velocity control: Speed controller
PWM stage
ext. PS: External power stage
M: Motor and encoder
Encoder: Encoder current value

Start - Start parameter velocity profile

Please note:

- *'Commissioning'...page 62*
- *'Application data'...page 68*

'0x8280-01 - Operating mode requested'...page 125 3: Velocity profile (*'0x8280-02 - Operating mode actual'...page 125*)	→	Start	→	Vel Velocity profile generator
'0x8400-03 - Positioning profile target velocity'...page 129				
'0x8400-04 - Positioning profile target acceleration'...page 129				
'0x8400-05 - Positioning profile target deceleration'...page 129				
'0x8F00-01 - Encoder feedback configuration'...page 142				

Vel - velocity profile

Start	→	Vel	→	Velocity control Speed controller

Limit Velocity - Limitation velocity

'0x8500-04 - Velocity control limit positive direction'...page 133	→	Limit Velocity	→	Velocity control Speed controller
'0x8500-05 - Velocity control limit negative direction'...page 133				
'0x8580-04 - Acceleration limit'...page 134				
'0x8580-06 - Deceleration limit'...page 134				

Velocity control - Speed controller

Limit Velocity Limitation velocity	→	Velocity control	→	PWM PWM stage
Vel Velocity profile generator				
'0x8500-01 - Velocity control configuration'...page 132				
'0x8500-03 - Velocity control target value'...page 133				
'0x8580-03 - Deceleration quick stop value'...page 134				
'0x8F00-01 - Encoder feedback configuration'...page 142				

Limit Voltage - Limitation voltage

'0x8680-04 - Power section supply voltage min. warning level'...page 135	→	Limit Voltage	→	PWM PWM stage
'0x8680-05 - Power section supply voltage max. warning level'...page 135				
'0x8680-06 - Power section supply voltage min. error level'...page 135				
'0x8680-07 - Power section supply voltage max. error level'...page 135				

PWM - PWM stage

Limit Voltage	→	PWM	→	ext. PS external power stage
Velocity control Drehzahlregelung				

Ext. PS - External power stage, motor, encoder

PWM PWM stage	→	ext. PS	→ ←	Motor Encoder *'0x8F00-02 - Encoder actual value'...page 142*
				'0x8680-02 - Power section supply voltage actual value'...page 135

4.8 Deployment I/O1...I/O4

Overview

The module has 4 digital connectors I/O1...I/O4. The ports can be used with the following configurable modes:

- Used as digital input
- Used as digital output
- Pairs use as encoder input for 24V HTL signal

Default settings

The 4 digital ports of the motion module have the following default settings, which fit to the standard pin-out to connect a power stage via pulse train like e.g. YASKAWA Sigma 5mini:

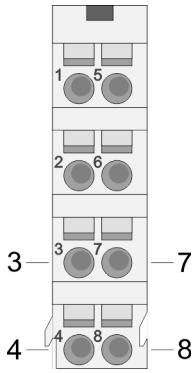

Default setting

Pos.	Function	Type	Description
3	I/O1	I	Digital input
4	I/O3	I	Digital input
7	I/O2	I	Digital input
8	I/O4	I	Digital input
I: Input, O: Output			

Via the Objects 0x8E00-08 ... 15 the I/O2 and I/O4 can be assigned to pre-defined signals. *'0x8E00-08 ... 15 - Signals of the power stage'...page 139*

Connecting a YASKAWA Sigma 5

Pos.	Function	Type	Description
3	I/O1	I/O	S-ON: Servo drive On/Off
4	I/O3	I/O	S-RDY: Servo ready
7	I/O2	I/O	ALM-RST: Reset Interrupts
8	I/O4	I/O	COIN: Position reached
I: Input, O: Output			

Connections

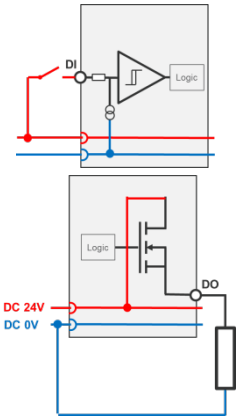

Digital input: DC 24V
IEC 61131-2 type 3
High-side (sink)

Digital output: DC 24V
500 mA
High-side (source)

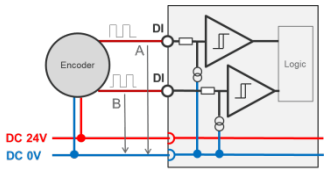

Encoder mode: 24V HTL signal
Phase A and B
100 kHz
4-fold evaluation
'Encoder - deployment'...page 88

4.8.1 Objects

Structure

DIO Control

'0x7100-01...04 - Digital input configuration I/O1...I/O4'...page 113 *'0x7200-01...04 - Digital output configuration I/O1...I/O4'...page 115* *'0x7200-05 - Digital output states I/O1...I/O4 actual states'...page 115* *'0x7200-06 - Digital output states I/O1...I/O4 requested states'...page 116*	→	DIO Control	→	*'0x7100-05 - Digital input states I/O1...I/O4'...page 114*

4.8.2 Usage as input for incremental encoder

4.8.2.1 Encoder - signal evaluation

Signal evaluation

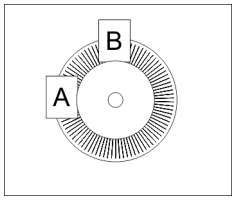

- Incremental encoder are sensors for detecting angular or positional changes.
- Depending on the sensor type and the desired resolution, the scanning happens by sliding contact, photo electrically or magnetically.
  - The scanning via *sliding contact* works in principle like a switch, which is mechanically operated.
  - With the *optical scanning* a disk, which has a fine raster, is optically scanned.
  - With the magnetic scanning a pole wheel or magnetic band is scanned which has been written with a raster by a magnetization, before.
- The incremental encoder has two sensors *Track A* and *Track B* for scanning.
- The sensors are arranged at an angle of 90 degrees from each other on the system to be scanned.
- In a rotational movement of the system, the sensors generate a specific number of pulses. These are a measure of the covered angel or way. With the electrical phase shift of the two signals the direction of rotation can be determined.
  - If the axis rotates to the right, then the signal of *Track A* is leading 90° towards the signal of *Track B*.
  - If the axis rotates to the left, then the signal of *Track A* is lagging 90° towards the signal of *Track B*.
- During the sensor evaluation from the difference between two counter values the velocity and direction can be determined.
- With *1-fold* evaluation one signal edge 0-1 of *Track A* corresponds to one counter pulse respectively one division of the system to be scanned corresponds to one counter pulse.
- With *4-fold* evaluation one signal edge of *Track A* and *Track B* corresponds to one counter pulse. The 4-fold evaluation is very often used.

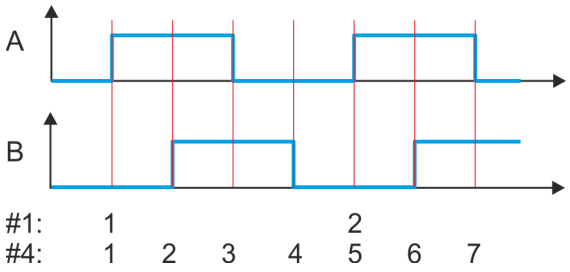

#1 1-fold evaluation
#4 4-fold evaluation

4.8.2.2 Encoder - deployment

Connections

There is the possibility to connect an encoder via I/O1 and I/O3. With the value 1 of object *'0x8F00-01 - Encoder feedback configuration'...page 142* the encoder function for I/O1 and I/O3 is enabled. Please note that the determined encoder value is not further evaluated in the module. Via object *'0x8F00-02 - Encoder actual value'...page 142* the encoder value can be read and further processed in you user program. The unused digital in-/outputs I/O2 and I/O4 are further free for usage.

Objects

'0x8F00-01 - Encoder feedback configuration'...page 142	→	DIO Control Encoder	→	*'0x8F00-02 - Encoder actual value'...page 142*

Connections

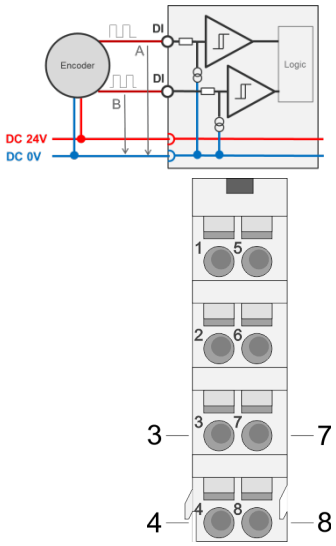

Encoder mode: 24V HTL signal
Phase A and B
100 kHz
4-fold evaluation

Pos.	Function	Type	Description
3	I/O1	I	Encoder function
4	I/O3	I	Encoder function
7	I/O2	I/O	for free usage
8	I/O4	I/O	for free usage
I: Input, O: Output			

Via the Objects 0x8E00-08 ... 15 the I/O2 and I/O4 can be assigned to pre-defined signals. '0x8E00-08 ... 15 - Signals of the power stage'...page 139

4.9 Brake control

Overview

With this motion module the break control is largely defined by the power stage and the connected motor. The brake control options, which are listed below, should only be used as a supplement to the brake control and not as replacement:

- Braking via external brake
- Quick stop via ramping

You have the possibility to control a brake via a digital input / output channel.

Braking via external brake

You have the possibility to control a brake via a digital input/output channel. By integration into your user program, you can control it if necessary.

Quick stop

Quick stop is a ramp function, with which the connected motor can be decelerated and brought to stop. During normal operation it is not necessary to activate this brake functions manually, since normal braking operations are performed by the profile generator. Quick stop is used when the operating conditions require a rapid stopping.

For quick stop there are the following possibilities:

- Direct stop with short-circuit braking and subsequent state change to *'Switch on disabled'*.
- Brake with quick stop deceleration and state change to *'Switch on disabled'*.

Quick stop - objects

'0x8100-01 - Control word'...page 117	→	Quick stop configuration	→	*'0x8100-02 - Status word'...page 118*
'0x8200-01 - Configuration quick stop'...page 124				
'0x8580-03 - Deceleration quick stop value'...page 134				

4.10 In-/Output area

Overview

The motion module uses 36byte input and 36byte output data.

Head module	Backplane bus	Motion module	
CPU respectively bus coupler	→	Process data	Acyclic channel
	←	36byte	

The data exchange with the motion module must be consistent across the 36 bytes! It is recommended to control it via the process image.

Input area

Offset	Size	Area	Description
0	2	Drive	*'0x8100-02 - Status word'...page 118*
2	2	Drive	*'0x8280-02 - Operating mode actual'...page 125*
4	4	Drive	*'0x8480-02 - Position actual value'...page 130*
8	4	Drive	*'0x8500-02 - Velocity control actual value'...page 133*
12	4	Drive	*'0x8580-02 - Acceleration/Deceleration actual value'...page 134*
16	4	Drive	*'0x8480-10 - Lag error'...page 132*
20	2	-	reserved
22	2	-	reserved
24	1	DIOs	*'0x7100-05 - Digital input states I/O1...I/O4'...page 114*
25	1	DIOs	*'0x7200-05 - Digital output states I/O1...I/O4 actual states'...page 115*
26	1	Acyclic	Acyclic communication channel: Status
27	1	Acyclic	Acyclic communication channel: Subindex in the object dictionary
28	2	Acyclic	Acyclic communication channel: Index in the object dictionary
30	4	Acyclic	Acyclic communication channel: Data
34	1	-	reserved
35	1	-	reserved

Please note if you write via the Acyclic channel to objects, which are mapped in the I/O area, their values will be overwritten again with the next cycle. Therefore, data mapped in the I/O area should not be written via the Acyclic channel!

Output area

Offset	Size	Area	Description
0	2	Drive	*'0x8100-01 - Control word'...page 117*
2	2	Drive	*'0x8280-01 - Operating mode requested'...page 125*
4	4	Drive	*'0x8400-02 - Positioning profile target position'...page 129*
8	4	Drive	*'0x8400-03 - Positioning profile target velocity'...page 129*
12	4	Drive	*'0x8400-04 - Positioning profile target acceleration'...page 129*
16	4	Drive	*'0x8400-05 - Positioning profile target deceleration'...page 129*
20	2	-	reserved
22	2	-	reserved
24	1	-	reserved
25	1	Drive	*'0x7200-06 - Digital output states I/O1...I/O4 requested states'...page 116*
26	1	Acyclic	Acyclic communication channel: Command
27	1	Acyclic	Acyclic communication channel: Subindex in the object dictionary
28	2	Acyclic	Acyclic communication channel: Index in the object dictionary
30	4	Acyclic	Acyclic communication channel: Data
34	1	-	reserved
35	1	-	reserved

4.11 Acyclic channel

Overview

Please note if you write via the Acyclic channel to objects, which are mapped in the I/O area, their values will be overwritten again with the next cycle. Therefore, data mapped in the I/O area should not be written via the Acyclic channel!

Via the *Acyclic channel* you can perform acyclic read and write commands. For this in the input/output area of the motion module a data area for the acyclic communication has been implemented. This area includes 8 bytes output and 8 bytes input data. These have the following assignment:

Request		Response
Output data ■ Byte 0: CMD - Command ■ Byte 1: SUBIDX - Subindex ■ Byte 2: IDX0 - Index (low byte) ■ Byte 3: IDX1 - Index (high byte) ■ Byte 4: DATA0 - Data (low byte) ■ Byte 5: DATA1 - Data ■ Byte 6: DATA2 - Data ■ Byte 7: DATA3 - Data (high byte)	→ ←	Input data ■ Byte 0: STATUS - Status ■ Byte 1: SUBIDX - Subindex ■ Byte 2: IDX0 - Index (low byte) ■ Byte 3: IDX1 - Index (high byte) ■ Byte 4: DATA0 - Data (low byte) ■ Byte 5: DATA1 - Data ■ Byte 6: DATA2 - Data ■ Byte 7: DATA3 - Data (high byte)
IDLE → Request → Response → IDLE		

CMD - Command

Code	Name	Description
0x11	READ_ONCE	Reading a data object With this command you can request the data once after the command has been recognized.
0x21	WRITE_ONCE	Writing a data object With this command data are written only once after the command has been recognized.

SUBIDX - Subindex Subindex in the object dictionary

IDX0/IDX1 - Index Index in the object dictionary

DATA0 ... DATA3 - Data Data which are to be transmitted.

STATUS - Status

Code	Name	Description
0x00	IDLE	Idle - waiting for commands
0x14	READ_ONCE	Command READ_ONCE has been recognized, data are valid.
0x24	WRITE_ONCE	Command WRITE_ONCE has been recognized, data were accepted.

Code	Name	Description
0x81:	READ_NOT_EXIST	Error - read access - data do not exist Command rejected!
0x91	WRITE_NOT_EXIST	Error - write access - data do not exist Command rejected!
0x92	WRITE_RNG_ERR	Error - write access - data out of range Command rejected!
0x93	WRITE_RDO_ERR	Error - write access - data can only be read Command rejected!
0x94	WRITE_WPR_ERR	Error - write access - data are write protected Command rejected!
0x99	ACYC_COM_ERR	Error during acyclic communication Command rejected!

For the *SPEED7 Studio* and the Siemens SIMATIC Manager there is the block FB 320 ACYC_RW for simplified access available.

More information about the usage of this block may be found in the manual "SPEED7 Operation List".

4.12 Parameter data

DS - Record set for access via CPU, PROFIBUS and PROFINET

IX - Index for access via CANopen

SX - Subindex for access via EtherCAT with Index 3100h + EtherCAT-Slot

More can be found in the according manual of your bus coupler.

Name	Bytes	Function	Default	DS	IX	SX
DIAG_EN	1	Diagnostic interrupt[1]	00h	00h	3100h	01h
IDX_1	2	Universal parameter 1: Index	00h	80h	3101h ... 3102h	02h
SUBIDX_1	2	Universal parameter 1: Subindex	00h	80h	3103h ... 3104h	03h
DATA_1	4	Universal parameter 1: Value	00h	80h	3105h ... 3108h	04h
IDX_2	2	Universal parameter 2: Index	00h	81h	3109h ... 310Ah	05h
SUBIDX_2	2	Universal parameter 2: Subindex	00h	81h	310Bh ... 310Ch	06h
DATA_2	4	Universal parameter 2: Value	00h	81h	310Dh ... 3110h	07h
IDX_3	2	Universal parameter 3: Index	00h	82h	3111h ... 3112h	08h
SUBIDX_3	2	Universal parameter 3: Subindex	00h	82h	3113h ... 3114h	09h
DATA_3	4	Universal parameter 3: Value	00h	82h	3115h ... 3118h	0Ah
IDX_4	2	Universal parameter 4: Index	00h	83h	3119h ... 311Ah	0Bh
SUBIDX_4	2	Universal parameter 4: Subindex	00h	83h	311Bh ... 311Ch	0Ch
DATA_4	4	Universal parameter 4: Value	00h	83h	311Dh ... 3120h	0Dh
IDX_5	2	Universal parameter 5: Index	00h	84h	3121h ... 3122h	0Eh
SUBIDX_5	2	Universal parameter 5: Subindex	00h	84h	3123h ... 3124h	0Fh
DATA_5	4	Universal parameter 5: Value	00h	84h	3125h ... 3128h	10h
IDX_6	2	Universal parameter 6: Index	00h	85h	3129h ... 312Ah	11h
SUBIDX_6	2	Universal parameter 6: Subindex	00h	85h	312Bh ... 312Ch	12h
DATA_6	4	Universal parameter 6: Value	00h	85h	312Dh ... 3130h	13h
IDX_7	2	Universal parameter 7: Index	00h	86h	3131h ... 3132h	14h
SUBIDX_7	2	Universal parameter 7: Subindex	00h	86h	3133h ... 3134h	15h
DATA_7	4	Universal parameter 7: Value	00h	86h	3135h ... 3138h	16h

1) This record set may only be transferred at STOP state.

For the *SPEED7 Studio* and the Siemens SIMATIC Manager there is the block FB 321 - ACYC_DS for simplified access available.

More information about the usage of this block may be found in the manual "SPEED7 Operation List".

4.13 Scaling and units

Scaling and units

- As a "normalization" for position, velocity and acceleration, you can specify a *Gear factor* *'0x8180-02 - Gear factor'...page 123* in the object dictionary. This gear factor represents *units* in thousands with the rotary axis makes exactly one revolution.
- With the pulse train module the "normalization" should be the same as the "normalization" of the power stage.
- Depending on the "normalization" and the set frequency pattern the motion module sends pulses to the power stage.

Direction of rotation

Positive direction of rotation is turning to the right (clockwise) with view towards the motor flange.

Current unit

- All currents are normalized to the unit [mA].
- [User] is a user-defined unit, which depends on the *Gear factor*. *'0x8180-02 - Gear factor'...page 123*

4.14 Monitoring and error reaction

4.14.1 Overview

General

The System SLIO motion module has monitor functions. The monitoring works in 3 steps:

- 1. Limitation
  - Status: *'0x8100-04 - Limit active bits'...page 120*
  - Limitations within the normal operating range, adapted to the respective application.
- 2. Warning
  - Status: *'0x8100-05 - Warnings active bits'...page 121*
  - The permissible operating range is almost exhausted and the system is about to initiate a fault response.
- 3. Error
  - Status: *'0x8100-06 - Error active bits'...page 122*
  - The permissible operating range is exceeded and a configurable fault response is automatically triggered.
  - Error messages are also shown via *'0x8100-02 - Status word'...page 118*.

CAUTION

Please consider that incorrectly set monitoring functions can cause damages to persons and materials!

Voltage monitoring

The DC 24V voltage of the module supply is monitored. If the voltage over or under runs the limit values, a warning or error is reported by *'0x8100-02 - Status word'...page 118*. On an error, there is an error reaction of the motion module, which can be configured.

Temperature monitoring

The motion module has an internal temperature monitoring of the µ-controller. Via the object dictionary limit temperatures can be defined. If the temperature over or under runs the limit values, there is an error reaction of the motion module, which can be configured. *'0x8780-02 - Temperature µ-Controller actual value'...page 137*

Position monitoring

The motion module monitors the traversing of a positioning. When specifying a target position, with exceeding a configurable limit in positive or negative direction of movement, the target position changed to a limit value. You will get a feedback on an active limitation via *'0x8100-02 - Status word'...page 118*. Exceeds the actual position one of the configurable values in positive or negative direction of movement, this is also reported via *'0x8100-02 - Status word'...page 118*. The module monitors the internally generated position set point and actual value.

Velocity monitoring

The motion module monitors the velocity. The set velocity is limited to a configurable value and with active limitation reported via *'0x8100-02 - Status word'...page 118*.

Error reaction

The following errors can trigger an error reaction:

- Temperature error µ-Controller
  '0x8780-02 - Temperature µ-Controller actual value'...page 137 > *'0x8780-04 - Temperature µ-Controller error level'...page 137*
- Error system communication timeout
  '0x6100-10 - System message timeout maximum'...page 112
- Error command output disable (BASP)

On error, the motion module starts an error reaction. The error reaction can be configured. Here you have the following possibilities:

- Immediate state change to *'Switch on disabled'*.
- Break with quick stop deceleration *'0x8580-03 - Deceleration quick stop value'...page 134* and subsequent state change to *'Switch on disabled'*.

4.14.2 Monitoring

Monitoring limitation

'0x8400-02 - Positioning profile target position'...page 129	→	Monitoring Limitation	→	*'0x8100-02 - Status word'...page 118*
'0x8480-02 - Position actual value'...page 130				
'0x8480-05 - Software position limit positive direction'...page 130				
'0x8480-06 - Software position limit negative direction'...page 131				
'0x8400-03 - Positioning profile target velocity'...page 129				
'0x8500-04 - Velocity control limit positive direction'...page 133				*'0x8100-04 - Limit active bits'...page 120*
'0x8500-05 - Velocity control limit negative direction'...page 133				

Monitoring warning

'0x8680-02 - Power section supply voltage actual value'...page 135 *'0x8680-04 - Power section supply voltage min. warning level'...page 135* *'0x8680-05 - Power section supply voltage max. warning level'...page 135* *'0x8780-02 - Temperature µ-Controller actual value'...page 137* *'0x8780-03 - Temperature µ-Controller warning level'...page 137* *'0x8480-10 - Lag error'...page 132*	→	Monitoring Warning	→	*'0x8100-02 - Status word'...page 118* *'0x8100-05 - Warnings active bits'...page 121*

Monitoring error

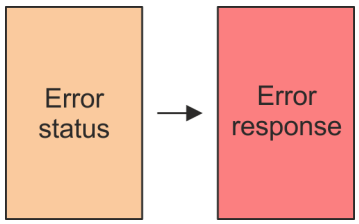

Error status - monitoring error

'0x8680-02 - Power section supply voltage actual value'...page 135 *'0x8680-06 - Power section supply voltage min. error level'...page 135* *'0x8680-07 - Power section supply voltage max. error level'...page 135* *'0x8780-02 - Temperature µ-Controller actual value'...page 137* *'0x8780-04 - Temperature µ-Controller error level'...page 137* *'0x8480-10 - Lag error'...page 132* *'0x8500-02 - Velocity control actual value'...page 133*	→	Error status Monitoring error	→	Error response Error reaction *'0x8100-06 - Error active bits'...page 122* *'0x8100-03 - Error code'...page 119* *'0x8100-02 - Status word'...page 118*

Error response - error reaction

Error status Monitoring errors *'0x8200-05 - Configuration fault reaction'...page 124* *'0x8580-03 - Deceleration quick stop value'...page 134*	→	Error response Configuration reaction	→	*'0x8100-02 - Status word'...page 118*

4.15 Diagnostics and interrupt

Diagnostic data

Via the parametrization you may activate a diagnostic interrupt for the module. With a diagnostics interrupt the module serves for diagnostics data for diagnostic interrupt$_{incoming}$. As soon as the reason for releasing a diagnostic interrupt is no longer present, the diagnostic interrupt$_{going}$ automatically takes place. Within this time window (1. diagnostic interrupt$_{incoming}$ until last diagnostic interrupt$_{going}$) the MF-LED of the module is on.

DS - Record set for access via CPU, PROFIBUS and PROFINET. The access happens by DS 01h. Additionally the first 4 bytes may be accessed by DS 00h.

IX - Index for access via CANopen. The access happens by IX 2F01h. Additionally the first 4 bytes may be accessed by IX 2F00h.

SX - Subindex for access via EtherCAT with Index 5005h.

More can be found in the according manual of your bus coupler.

Name	Bytes	Function	Default	DS	IX	SX
ERR_A	1	Diagnostic	00h	01h	2F01h	02h
MODTYP	1	Module information	18h			03h
ERR_C	1	reserved	00h			04h
ERR_D	1	reserved	00h			05h
CHTYP	1	Channel type	72h			06h
NUMBIT	1	Number diagnostics bits per channel	08h			07h
NUMCH	1	Number channels of the module	04h			08h
CHERR	1	Channel error	00h			09h
CH0ERR	1	Channel-specific error	00h			0Ah
CH1ERR	1	Channel-specific error	00h			0Bh
CH2ERR	1	Channel-specific error	00h			0Ch
CH3ERR	1	Channel-specific error	00h			0Dh
CH4ERR… CH7ERR	4	reserved	00h			0Eh ... 11h
DIAG_US	4	µs ticker (32bit)	00h			13h

ERR_A Diagnostic

Byte	Bit 7 ... 0
0	■ Bit 0: set at module failure ■ Bit 1: set at internal error ■ Bit 2: set at external error ■ Bit 3: set at channel error ■ Bit 6 ... 4: reserved ■ Bit 7: set at error in parametrization

MODTYP Module information

Byte	Bit 7 ... 0
0	■ Bit 3 ... 0: Module class – 1000b: Function module ■ Bit 4: set at channel information present ■ Bit 7 ... 5: reserved

CHTYP Channel type

Byte	Bit 7 ... 0
0	■ Bit 6 ... 0: Channel type – 72h: Digital output ■ Bit 7: 0 (fix)

NUMBIT Diagnostic bits

Byte	Bit 7 ... 0
0	Number of diagnostic bits per channel (here 08h)

NUMCH Channels

Byte	Bit 7 ... 0
0	Number of channels of a module (here 04h)

CHERR - Channel error

Byte	Bit 7 ... 0
0	■ Bit 0: set on error output I/O1 ■ Bit 1: set on error output I/O2 ■ Bit 2: set on error output I/O3 ■ Bit 3: set on error output I/O4 ■ Bit 7 ... 4: reserved

CH0ERR...CH3ERR channel specific

Byte	Bit 7 ... 0
0	Diagnostics interrupt due to ... ■ Bit 2 ... 0: reserved ■ Bit 3: Short circuit ■ Bit 7 ... 4: reserved

DIAG_US µs ticker

Byte	Bit 7 ... 0
0 ... 3	Value µs ticker at the moment of the diagnostic

ERR_C/D, CH4ERR ... CH7ERR reserved

Byte	Bit 7 ... 0
0	reserved

4.16 Example: 054-1DA00 with YASKAWA Sigma 5 mini

4.16.1 Job definition

In the following there is an example of the commissioning of the System SLIO motion module 054-1DA00 with a YASKAWA Sigma 5 mini power stage (servopack). In the example the motor is to be coupled 1:1 to a disk, which has a circumference of 20mm and drives a belt. Thus with one rotation of the motor a small load, coupled by the belt, is moved about 20mm. For this the following drive components are required:

- YASKAWA power stage SGDV-2R9EP1A (pulse train reference with 17bit encoder)
- YASKAWA Servo drive SGMMV-A2E2A21 (6000 U/min)

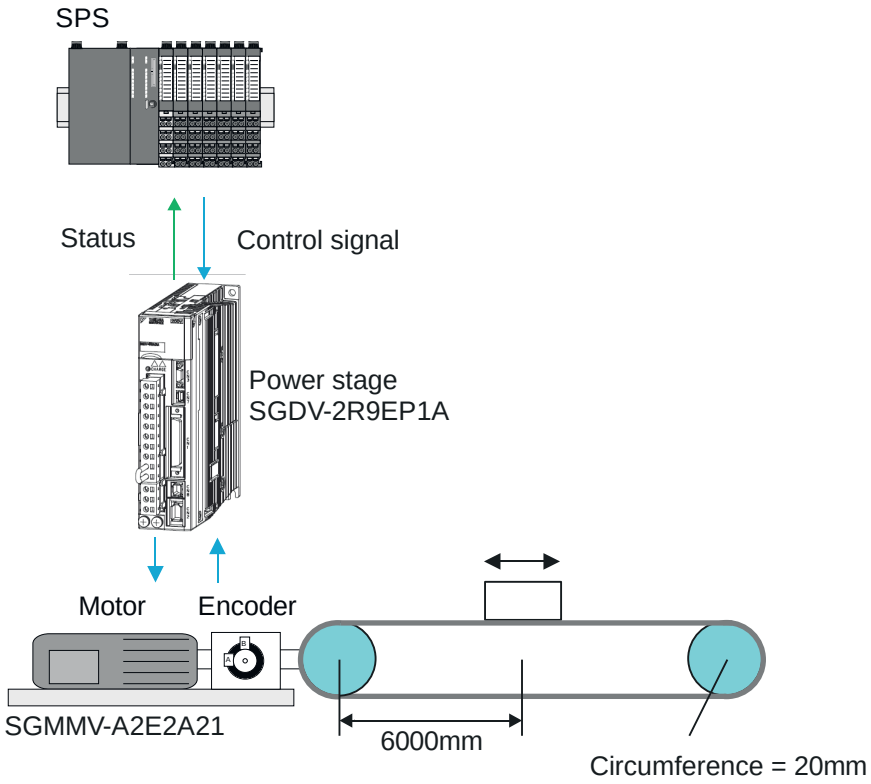

4.16.2 Wiring

Basic structure

- Perform the wiring of the servo components as specified in the YASKAWA manual.
- Please regard the requirements for the wiring of the System SLIO
  'Wiring 8x periphery modules'...page 29
  'Connections'...page 51

Connection power stage System SLIO

- Connect the power stage according to the following illustration to the System SLIO Motion module:

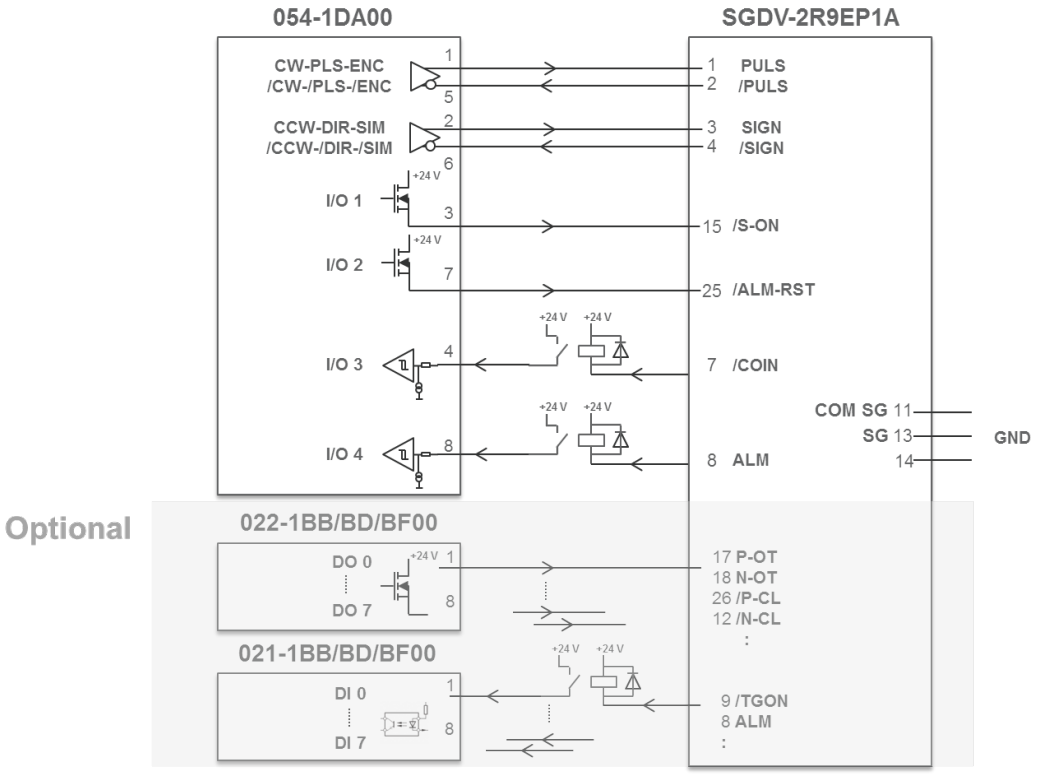

4.16.3 Commissioning of the power stage

Basic commissioning

- Perform the basic commissioning, configuration and optimization of the power stage according to the specifications in the YASKAWA manuals. For this the software SigmaWin+ from YASKAWA is required.

Configuration of the interface to the power stage for test operation

In the following the configuration of the interface to the power stage for test operation is described. First check whether this configuration is suitable for your application and does not cause any damages! Also consider the chapter trial operation in the YASKAWA manuals. Exemplary the interface between power stage and motion module is to be described as follows:

- Operating mode: Positioning
- Encoder resolution power stage: 17bit (131072 Encoder pulses / U)
- Pulse shape interface: Incremental encoder simulation (A/B) (freely chosen, other possible)
- The direct coupling between the motor shaft and belt pulley results in a 1:1 translation.
- The System SLIO motion module provides 40000 encoder pulses / revolution. Thus, the gear factor in the power stage results in: 131072 / 40000
- Controlling and evaluation of the signals /SO-N, /ALM-RST, COIN and ALM should directly take place via the System SLIO motion module.
- Set the following parameters in the power stage:

Parameter of the power stage

No.	Name	Value
Pn000	Basic Function Select Switch 0	0010H
1. digit	Direction Selection	0: Sets CCW as forward direction.
2. digit	Control Method Selection	1: Position control (pulse train reference)
3. digit	Reserved (Do not change.)	0: Reserved (Do not use.)
4. digit	Reserved (Do not change.)	0: Reserved (Do not use.)
Pn200	Position Control Reference Form Selection Switch	0014H
1. digit	Reference Pulse Form	4: Two-phase pulse train with 90° phase differential (phase A + phase B) ×4, positive logic.
2. digit	Clear Signal Form	1: Clears position error at the rising edge of the signal.
3. digit	Clear Operation	0: Clears position error at the baseblock (servomotor power OFF or alarm occurred).
4. digit	Filter Selection	0: Uses reference input filter 1 for line driver signal (to 1 Mpps).
Pn20E	Electronic Gear Ratio (Numerator)	131072 (17 Bit Encoder)
Pn210	Electronic Gear Ratio (Denominator)	40000 (units)
Pn50A	Input Signal Selection 1	x701H
1. digit	Input Signal Allocation Mode	1: Changes the sequence input signal allocation for each signal.
2. digit	Servo ON (/S-ON) Signal Mapping	0: Active when CN1-15 input signal is ON (L-level).
3. digit	/P-CON Signal Mapping	7: Always active (fixed).
4. digit	P-OT Signal Mapping	x: Application specific
Pn50B	Input Signal Selection 2	xx4xH
1. digit	N-OT Signal Mapping	x: Application specific
2. digit	/ALM-RST Signal Mapping	4: Active on the falling edge of CN1-25 input signal.
3. digit	/P-CL Signal Mapping	x: Application specific
4. digit	/N-CL Signal Mapping	x: Application specific
Pn50E	Output Signal Selection 1	3xx1H
1. digit	Positioning Completion Signal Mapping (/COIN)	1: Outputs the signal from CN1-7 output terminal.
2. digit	Speed Coincidence Detection Signal Mapping (/V-CMP)	x: Application specific
3. digit	Servomotor Rotation Detection Signal Mapping (/TGON)	x: Application specific
4. digit	Servo Ready Signal Mapping (/S-RDY)	x: Application specific

4.16.4 Configuration of the System SLIO motion module

Parameters for the operation

Operating mode:	Positioning
Pulse shape:	Incremental encoder simulation (A/B), suitable to the setting of the power stage
Coupling motion module to power stage:	1:1
User unit:	0.01mm
Traverse due to the mechanics:	$20\frac{mm}{r}$
	with r: revolutions
→	2000 units ≙ Traverse path of 20mm
Position limits:	±6000mm
→	$\frac{\pm 6000mm}{0.01mm} \mathrel{\hat{=}} \pm 600000units$
Max. Motor speed:	$\pm 6000\frac{r}{min} = \pm 100\frac{r}{s} \mathrel{\hat{=}} \pm 2000\frac{mm}{s}$
→	$\frac{\pm 2000\frac{mm}{s}}{0.01mm} \mathrel{\hat{=}} 200000\frac{units}{s}$
Required max. Acceleration:	$100\frac{mm}{s^2}$
→	$\frac{\frac{100mm}{s^2}}{0.01mm} \mathrel{\hat{=}} 10000\frac{units}{s^2}$
Required max. Deceleration:	$200\frac{mm}{s^2}$
→	$\frac{\frac{200mm}{s^2}}{0.01mm} \mathrel{\hat{=}} 20000\frac{units}{s^2}$
Specific I/O signals of the power stage:	Controlling and evaluation is done via the System SLIO motion module

4.16.5 Setting of the objects

According to the operation, the following object of the motion module are to be set. The initial setting can be done via up to 7 module parameters. After the module start-up the other objects are to be transmitted via the *Acyclic channel*.

Objects

Index-subindex	Value
'0x8180-02 - Gear factor'...page 123	2000000 (2000 units * 1000)
'0x8480-05 - Software position limit positive direction'...page 130	600000
'0x8480-06 - Software position limit negative direction'...page 131	-600000
'0x8500-04 - Velocity control limit positive direction'...page 133	200000
'0x8500-05 - Velocity control limit negative direction'...page 133	-200000
I/O1 *'0x7100-01...04 - Digital input configuration I/O1...I/O4'...page 113*	0 (I/O1 is used as output)
I/O1 *'0x7200-01...04 - Digital output configuration I/O1...I/O4'...page 115*	1 (I/O1 output is activated)
I/O2 *'0x7100-01...04 - Digital input configuration I/O1...I/O4'...page 113*	0 (I/O2 is used as output)
I/O2 *'0x7200-01...04 - Digital output configuration I/O1...I/O4'...page 115*	1 (I/O2 output is activated)
I/O3 *'0x7200-01...04 - Digital output configuration I/O1...I/O4'...page 115*	0 (I/O3 output is de-activated)
I/O4 *'0x7200-01...04 - Digital output configuration I/O1...I/O4'...page 115*	0 (I/O4 output is de-activated)
'0x8E00-01 - Pulse train configuration'...page 138	3 (incremental encoder simulation (A/B))
'0x8E00-08 - Pulse train Servo-On digital output I/O1…I/O4'...page 139	1 (assigned to I/O1)
'0x8E00-09 - Pulse train Servo-On digital output active polarity I/O1…I/O4'...page 140	1 (Low level with activated DO)
'0x8E00-10 - Pulse train Alarm-Reset digital output I/O1…I/O4'...page 140	2 (assigned to I/O2)
'0x8E00-11 - Pulse train Alarm-Reset digital output active polarity I/O1…I/O4'...page 140	1 (Low level with activated DO)
'0x8E00-12 - Pulse train In-Position digital input I/O1…I/O4'...page 141	3 (assigned to I/O3)
'0x8E00-13 - Pulse train In-Position digital input active polarity I/O1…I/O4'...page 141	1 (low level with activated DI)
'0x8E00-14 - Pulse train Alarm digital input I/O1…I/O4'...page 141	4 (assigned to I/O4)
'0x8E00-15 - Pulse train Alarm digital input active polarity I/O1…I/O4'...page 141	0 (high level with activated DI)

4.16.6 Test operation

Proceeding

The System SLIO motion module and the power stage are now ready for a test operation. The system can be controlled via the cyclic data and the state machine.

'In-/Output area'...page 90

'States'...page 67

1. Reset a previously encountered possible error with *'0x8100-01 - Control word'...page 117*.
2. Switch the motion module to the status *Operation enabled* by means of *'0x8100-01 - Control word'...page 117*.
3. Check in *'0x8100-02 - Status word'...page 118* the individual responded status and switch to the next status only if the responded status corresponds to the expected status.*'States'...page 67*
4. In the status *Operation enabled* you can now specify additional setpoints like *Target position*, *Velocity*, *Acceleration* and *deceleration*.

5 Object dictionary

5.1 Use

Addressing

The System SLIO motion module provides its data, such as "Profiling target position" via an object dictionary. In this object dictionary the objects are organized and addressable a unique number consisting of *Index* and *Subindex*. The number is specified as follows:

0x	Index (hexadecimal)	-	Subindex (decimal)
Example: 0x8400-03			

To improve the structure and for expansion at System SLIO Motion Module another object numbering (index-assignment) is used besides the standard CiA 402.

Index area

By separating into index and subindex a grouping is possible. The individual areas are divided into groups of related objects. With the System SLIO motion module this object directory is structured as follows:

Index area	Content
0x1000 up to 0x6FFF	General data and system data
0x7000 up to 0x7FFF	Data of the digital input and output part
0x8000 up to 0x8FFF	Data of the axis

Each object has a subindex 0. Calling an object with subindex 0, the number of available subindexes of the corresponding object is returned.

Accessing the object dictionary

The communication takes place via the I/O area. The main data of the object dictionary are mapped into the I/O area. *'In-/Output area'...page 90*

Included in the mapping is also the *Acyclic Channel* through which you can acyclically access the objects of the motion module. With the acyclic access, any access to the object dictionary is acknowledged by the motion module. *'Acyclic channel'...page 92*

The mapping cannot be changed.

Please note if you write via the Acyclic channel to objects, which are mapped in the I/O area, their values will be overwritten again with the next cycle. Therefore, data mapped in the I/O area should not be written via the Acyclic channel!

5.2 Objects

5.2.1 Overview

Explanation of the elements

Explanation of the elements

Index-Sub - Index and subindex

Sx - Data type SIGNEDx

Ux - Data type UNSIGNEDx

STG - Data type STRING

RW - Read- write access

[degC] - Temperature in degree celsius (°C)

[inc] - Increment - pulse of an encoder *'Encoder - signal evaluation'...page 87*

[User] - The unit [User] is a user defined unit, which can be set via *'0x8180-02 - Gear factor'...page 123*.

* - Object, which is mapped in the *'In-/Output area'...page 90*. If you write via the *Acyclic channel* to this object, the value is overwritten with the next cycle. *'Acyclic channel'...page 92*

** - Object, which can be written in all states of the state machine. Otherwise objects can only be written in the state *'Switch on disabled'*. *'Accessing the state machine'...page 68*

'Passwords and security - 0x1100'...page 111

Available objects

'0x1000-00 - Device type'...page 110
'0x1008-00 - Manufacturer device name'...page 110
'0x100A-00 - Manufacturer software version'...page 110
'0x1018-00 - Product - number of entries'...page 110
'0x1018-02 - Product ID'...page 110
'0x1018-03 - Revision number'...page 111
'0x1018-04 - Serial number'...page 111
'0x1018-05 - Module category'...page 111
'0x1100-00 - Passwords and security - number of entries'...page 111
'0x1100-01 - Password'...page 111
'0x6100-00 - System command - number of entries'...page 112
'0x6100-10 - System message timeout maximum'...page 112
'0x7100-00 - Digital inputs - number of entries'...page 112
'0x7100-01...04 - Digital input configuration I/O1...I/O4'...page 113
'0x7100-05 - Digital input states I/O1...I/O4'...page 114
'0x7200-00 - Digital outputs - number of entries'...page 114
'0x7200-01...04 - Digital output configuration I/O1...I/O4'...page 115
'0x7200-05 - Digital output states I/O1...I/O4 actual states'...page 115
'0x7200-06 - Digital output states I/O1...I/O4 requested states'...page 116
'0x8100-00 - Control drive - number of entries'...page 116
'0x8100-01 - Control word'...page 117

'0x8100-02 - Status word'...page 118
'0x8100-03 - Error code'...page 119
'0x8100-04 - Limit active bits'...page 120
'0x8100-05 - Warnings active bits'...page 121
'0x8100-06 - Error active bits'...page 122
'0x8180-00 - Configure drive - number of entries'...page 122
'0x8180-02 - Gear factor'...page 123
'0x8200-00 - Options - number of entries'...page 123
'0x8200-01 - Configuration quick stop'...page 124
'0x8200-05 - Configuration fault reaction'...page 124
'0x8280-00 - Operating mode - number of entries'...page 124
'0x8280-01 - Operating mode requested'...page 125
'0x8280-02 - Operating mode actual'...page 125
'0x8300-00 - Homing - number of entries'...page 125
'0x8300-02 - Homing method'...page 126
'0x8300-03 - Homing digital input I/O1…I/O4'...page 126
'0x8300-04 - Homing digital input active polarity I/O1…I/O4'...page 127
'0x8300-05 - Homing target position'...page 127
'0x8300-06 - Homing velocity V1'...page 127
'0x8300-07 - Homing velocity V2'...page 128
'0x8300-08 - Homing acceleration'...page 128
'0x8300-09 - Homing deceleration'...page 128
'0x8300-10 - Homing offset value'...page 128
'0x8400-00 - Positioning profile - number of entries'...page 128
'0x8400-02 - Positioning profile target position'...page 129
'0x8400-03 - Positioning profile target velocity'...page 129
'0x8400-04 - Positioning profile target acceleration'...page 129
'0x8400-05 - Positioning profile target deceleration'...page 129
'0x8480-00 - Positions and limits - number of entries'...page 130
'0x8480-02 - Position actual value'...page 130
'0x8480-03 - Target position'...page 130
'0x8480-05 - Software position limit positive direction'...page 130
'0x8480-06 - Software position limit negative direction'...page 131
'0x8480-07 - Range limit positive direction'...page 131
'0x8480-08 - Range limit negative direction'...page 131
'0x8480-09 - In-position window'...page 132
'0x8480-10 - Lag error'...page 132
'0x8500-00 - Velocity - number of entries'...page 132
'0x8500-01 - Velocity control configuration'...page 132
'0x8500-02 - Velocity control actual value'...page 133
'0x8500-03 - Velocity control target value'...page 133

'0x8500-04 - Velocity control limit positive direction'...page 133
'0x8500-05 - Velocity control limit negative direction'...page 133
'0x8580-00 - Acceleration and deceleration - number entries'...page 133
'0x8580-02 - Acceleration/Deceleration actual value'...page 134
'0x8580-03 - Deceleration quick stop value'...page 134
'0x8580-04 - Acceleration limit'...page 134
'0x8580-06 - Deceleration limit'...page 134
'0x8680-00 - Voltages - number of entries'...page 134
'0x8680-02 - Power section supply voltage actual value'...page 135
'0x8680-04 - Power section supply voltage min. warning level'...page 135
'0x8680-05 - Power section supply voltage max. warning level'...page 135
'0x8680-06 - Power section supply voltage min. error level'...page 135
'0x8680-07 - Power section supply voltage max. error level'...page 135
'0x8780-00 - Temperatures - number of entries'...page 137
'0x8780-02 - Temperature µ-Controller actual value'...page 137
'0x8780-03 - Temperature µ-Controller warning level'...page 137
'0x8780-04 - Temperature µ-Controller error level'...page 137
'0x8780-05 - Temperature µ-Controller offset'...page 137
'0x8780-06 - Temperature µ-Controller gain'...page 137
'0x8E00-00 - Pulse train parameter - number of entries'...page 138
'0x8E00-01 - Pulse train configuration'...page 138
'0x8E00-02 - Pulse train pulses per revolution'...page 139
'0x8E00-03 - Pulse train set frequency'...page 139
'0x8E00-04 - Pulse train max. frequency'...page 139
'0x8E00-08 - Pulse train Servo-On digital output I/O1…I/O4'...page 139
'0x8E00-09 - Pulse train Servo-On digital output active polarity I/O1…I/O4'...page 140
'0x8E00-10 - Pulse train Alarm-Reset digital output I/O1…I/O4'...page 140
'0x8E00-11 - Pulse train Alarm-Reset digital output active polarity I/O1…I/O4'...page 140
'0x8E00-12 - Pulse train In-Position digital input I/O1…I/O4'...page 141
'0x8E00-13 - Pulse train In-Position digital input active polarity I/O1…I/O4'...page 141
'0x8E00-14 - Pulse train Alarm digital input I/O1…I/O4'...page 141
'0x8E00-15 - Pulse train Alarm digital input active polarity I/O1…I/O4'...page 141
'0x8F00-00 - Encoder - number of entries'...page 142
'0x8F00-01 - Encoder feedback configuration'...page 142
'0x8F00-02 - Encoder actual value'...page 142

5.2.2 Information about the product - 0x1000...0x1018

0x1000-00 - Device type

Index-Sub	Type	RW	Default	Value range	Unit	Description
0x1000-00	U32	R	0	0 … 0xFFFFFFFF		Device type

'Explanation of the elements'...page 107

Here according to CiA 402 the device type is shown.

MSB																								LSB
31							24	23							16	15								0
Additional information																Device profile number								
Mode bit = 0x00								Type = 0x00								0x0192								

0x1008-00 - Manufacturer device name

Index-Sub	Type	RW	Default	Value range	Unit	Description
0x1008-00	U32	R	0	0 … 0xFFFFFFFF		Manufacturer device name

'Explanation of the elements'...page 107

Here you can find the name of the motion module ASCII coded: 0x50544D31: *'PTM1'*

0x100A-00 - Manufacturer software version

Index-Sub	Type	RW	Default	Value range	Unit	Description
0x100A-00	U32	R	current version	0 … 0xFFFFFFFF		Manufacturer software version

'Explanation of the elements'...page 107

Here you can find the software version of the motion module 8bit coded e.g. 0x01050300: V1.5.3.0

0x1018-00 - Product - number of entries

Index-Sub	Type	RW	Default	Value range	Unit	Description
0x1018-00	U08	R	5	5		Product - number of entries

'Explanation of the elements'...page 107

0x1018-02 - Product ID

Index-Sub	Type	RW	Default	Value range	Unit	Description
0x1018-02	U32	R	0x534C494F	0 … 0xFFFFFFFF		Product ID

'Explanation of the elements'...page 107

Here according to CiA 402 the product ID of the motion module can be found: 0x534C494F

0x1018-03 - Revision number

Index-Sub	Type	RW	Default	Value range	Unit	Description
0x1018-03	U32	R	0	0 … 0xFFFFFFFF		Revision number
'Explanation of the elements'...page 107						

Here according to CiA 402 the revision number of the module can be found. Currently this object is not used and returns 0.

0x1018-04 - Serial number

Index-Sub	Type	RW	Default	Value range	Unit	Description
0x1018-04	U32	R	0	0 … 0xFFFFFFFF		Serial number
'Explanation of the elements'...page 107						

Here according to CiA 402 the serial number of the module can be found. Currently this object is not used and returns 0.

0x1018-05 - Module category

Index-Sub	Type	RW	Default	Value range	Unit	Description
0x1018-05	U32	R	0	0 … 200		Module category
'Explanation of the elements'...page 107						

Here according to CiA 402 you can find the module category of the motion module: 0x41: PTM

5.2.3 Passwords and security - 0x1100

0x1100-00 - Passwords and security - number of entries

Index-Sub	Type	RW	Default	Value range	Unit	Description
0x1100-00	U08	R	2	2		Passwords and security - number of entries
'Explanation of the elements'...page 107						

0x1100-01 - Password

Index-Sub	Type	RW	Default	Value range	Unit	Description
0x1100-01	U32	R/W**	0	0 … 0xFFFFFFFF		Password
'Explanation of the elements'...page 107						

With this object you can enable the password, which allows to write objects in all states of the state machine. Otherwise objects can only be written in the state *'Switch on disabled'*. The password is: 0xABCDABCD and cannot be changed. *'Accessing the state machine'...page 68*

5.2.4 System command - 0x6100

0x6100-00 - System command - number of entries

Index-Sub	Type	RW	Default	Value range	Unit	Description
0x6100-00	U08	R	17	17		System command - number of entries
'Explanation of the elements'...page 107						

0x6100-10 - System message timeout maximum

Index-Sub	Type	RW	Default	Value range	Unit	Description
0x6100-10	U32	R/W	0	0 … 0xFFFFFFFF	[mS]	System message timeout maximum
'Explanation of the elements'...page 107						

With this object, you can enable the monitoring of the cyclic communication to the System SLIO bus and thus to the fieldbus. If there is no communication within the specified time in ms, the motion module enters the error state. Should the application require a cyclic communication with the motion module but the monitoring of the cycle can not be ensured on the side of the fieldbus coupler or CPU, by means of this object a monitoring time should be entered. By default, no monitoring is active.

5.2.5 Digital inputs I/O1...I/O4 - 0x7100

0x7100-00 - Digital inputs - number of entries

Index-Sub	Type	RW	Default	Value range	Unit	Description
0x7100-00	U08	R	7	7		Digital inputs - number of entries
'Explanation of the elements'...page 107 *'Deployment I/O1...I/O4'...page 86*						

0x7100-01...04 - Digital input configuration I/O1...I/O4

Index-Sub	Type	RW	Default	Value range	Unit	Description
0x7100-01	U08	R/W**	1	0 … 1		Digital input configuration I/O1
0x7100-02	U08	R/W**	1	0 … 1		Digital input configuration I/O2
0x7100-03	U08	R/W**	1	0 … 1		Digital input configuration I/O3
0x7100-04	U08	R/W**	1	0 … 1		Digital input configuration I/O4

'Explanation of the elements'...page 107

With these objects, the four digital inputs/outputs I/O1...I/O4 are configured as inputs.

- 0: The I/Ox is used as digital output
  - DC 24V
  - 500 mA
  - High-side (source)
- 1: The I/Ox is used as digital input
  - DC 24V
  - IEC 61131-2 Typ 3
  - High-side (sink)
- The inputs can always be read, so its configuration is independent of the configuration as outputs (object 0x7200-01 ... -04).
- If a digital input/output is defined as output via object 0x7200, it can be read via the cyclic data *Status DO*. It is the really pending state at the digital driver part and not set point value, generated by the cyclic data *Status DI* or system.
- If a digital input/output is used by the system (set by object 0x8300 or 0x8E00), this also can be read via the cyclic data *Status DI*.

0x7100-05 - Digital input states I/O1...I/O4

Index-Sub	Type	RW	Default	Value range	Unit	Description
0x7100-05*	U08	R	0	0 … 0xFF		Digital input states I/O1...I/O4

'Explanation of the elements'...page 107

This object contains the current values of the digital inputs I/O1...I/O4. They also can be found in the I/O area.

Please note if you write via the Acyclic channel to objects, which are mapped in the I/O area, their values will be overwritten again with the next cycle. Therefore, data mapped in the I/O area should not be written via the Acyclic channel!

Bit 3 ... 0

3	2	1	0	Description
x	x	x	0	Input I/O1 has signal "0"
x	x	x	1	Input I/O1 has signal "1"
x	x	0	x	Input I/O2 has signal "0"
x	x	1	x	Input I/O2 has signal "1"
x	0	x	x	Input I/O3 has signal "0"
x	1	x	x	Input I/O3 has signal "1"
0	x	x	x	Input I/O4 has signal "0"
1	x	x	x	Input I/O4 has signal "1"

5.2.6 Digital output I/O1...I/O4 - 0x7200

0x7200-00 - Digital outputs - number of entries

Index-Sub	Type	RW	Default	Value range	Unit	Description
0x7200-00	U08	R	6	6		Digital outputs - number of entries

'Explanation of the elements'...page 107

'Deployment I/O1...I/O4'...page 86

0x7200-01...04 - Digital output configuration I/O1...I/O4

Index-Sub	Type	RW	Default	Value range	Unit	Description
0x7200-01	U08	R/W**	0	0 … 1		Digital output configuration I/O1
0x7200-02	U08	R/W**	0	0 … 1		Digital output configuration I/O2
0x7200-03	U08	R/W**	0	0 … 1		Digital output configuration I/O3
0x7200-04	U08	R/W**	0	0 … 1		Digital output configuration I/O4

'Explanation of the elements'...page 107

With these objects, the four digital inputs/outputs I/O1...I/O4 are configured as outputs. If a digital input/output is defined as output, it can be read via the cyclic data. This is the really pending state at the digital driver part.

Value	Description
0	The output is de-activated.
1	The output is activated and can be controlled by the cyclic data *'0x7200-06 - Digital output states I/O1...I/O4 requested states'...page 116*.

0x7200-05 - Digital output states I/O1...I/O4 actual states

Index-Sub	Type	RW	Default	Value range	Unit	Description
0x7200-05*	U08	R	0	0 … 0xFF		Digital output states I/O1...I/O4 actual states

'Explanation of the elements'...page 107

This object contains the current values of the digital outputs. They also can be found in the I/O area.

Please note if you write via the Acyclic channel to objects, which are mapped in the I/O area, their values will be overwritten again with the next cycle. Therefore, data mapped in the I/O area should not be written via the Acyclic channel!

Bit 3 ... 0

3	2	1	0	Description
x	x	x	0	I/O1 has signal "0"
x	x	x	1	I/O1 has signal "1"
x	x	0	x	I/O2 has signal "0"
x	x	1	x	I/O2 has signal "1"
x	0	x	x	I/O3 has signal "0"
x	1	x	x	I/O3 has signal "1"
0	x	x	x	I/O4 has signal "0"
1	x	x	x	I/O4 has signal "1"

0x7200-06 - Digital output states I/O1...I/O4 requested states

Index-Sub	Type	RW	Default	Value range	Unit	Description
0x7200-06*	U08	R/W**	0	0 … 0xFF		Digital output states I/O1...I/O4 requested states

'Explanation of the elements'...page 107

This object contains the set values of the digital outputs I/O1...I/O4. They also can be found in cyclic data in the I/O area.

Please note if you write via the Acyclic channel to objects, which are mapped in the I/O area, their values will be overwritten again with the next cycle. Therefore, data mapped in the I/O area should not be written via the Acyclic channel!

Bit 3 ... 0

3	2	1	0	Description
x	x	x	0	Output I/O1 has signal "0"
x	x	x	1	Output I/O1 has signal "1"
x	x	0	x	Output I/O2 has signal "0"
x	x	1	x	Output I/O2 has signal "1"
x	0	x	x	Output I/O3 has signal "0"
x	1	x	x	Output I/O3 has signal "1"
0	x	x	x	Output I/O4 has signal "0"
1	x	x	x	Output I/O4 has signal "1"

5.2.7 Control drive - 0x8100

0x8100-00 - Control drive - number of entries

Index-Sub	Type	RW	Default	Value range	Unit	Description
0x8100-00	U08	R	6	6		Control drive - number of entries

'Explanation of the elements'...page 107

In this module, the state machine emulates the states of the connected power stage. It does not represent its current states. Only by adjusting the DIO signals on the signals of the power stage as e.g. S-ON, ALM-RST, S-RDY and COIN, you can control its states.

'Deployment I/O1...I/O4'...page 86

0x8100-01 - Control word

Index-Sub	Type	RW	Default	Value range	Unit	Description
0x8100-01*	U16	R/W**	0	0 … 65535		Control word

With the *Control word* you can change the current state of the motor controller respectively reset all the error bits:

- Bit 0: Switch on
- Bit 1: Disable voltage
- Bit 2: Quick stop
- Bit 3: Switch on
- Bit 6 ... 4: reserved
- Bit 7: Command "Fault reset"
- Bit 15 ... 8: reserved

'Explanation of the elements'...page 107

'States'...page 67

Bit combinations

3	2	1	0	Bit 3 ... 0 - Control drive state
x	1	1	0	Shutdown
0	1	1	1	Switch on
1	1	1	1	Switch on and enable operation
x	x	0	x	Disable voltage
0	1	1	1	Disable operation
1	1	1	1	Enable operation
x	0	1	x	Quick stop

15...8	7	6	Bit 15 ... 4 - Reset error bits
reserved	0→1	reserved	Edge 0-1 resets all error bits in *'0x8100-06 - Error active bits'...page 122*.

0x8100-02 - Status word

Index-Sub	Type	RW	Default	Value range	Unit	Description
0x8100-02*	U16	R	0	0 … 65535		Status word

'Explanation of the elements'...page 107

'States'...page 67

Please consider that the data bits are not latched and may need to be temporarily stored for further processing!

Bit 7 ... 0 - Control drive state

7	6	5	4	3	2	1	0	hex	Description
x	0	x	x	0	0	0	0	0x00	State *'Not ready to switch on'*
x	1	x	x	0	0	0	0	0x40	State *'Switch on disabled'*
x	0	1	x	0	0	0	1	0x21	State *'Ready to switch on'*
x	0	1	x	0	0	1	1	0x23	State *'Switched on'*
x	0	1	x	0	1	1	1	0x27	State *'Operation enabled'*
x	0	0	x	0	1	1	1	0x07	State *'Quick stop active'*
x	0	x	x	1	1	1	1	0x0F	State *'Fault reaction active'*
x	0	x	x	1	0	0	0	0x08	State *'Error'* *'0x8100-03 - Error code'...page 119*
1	x	x	x	x	x	x	x	0x80	A warning has occurred *'0x8100-05 - Warnings active bits'...page 121*

Bit 15 ... 8 - Operating mode state

15	14	13	12	11	10	9	8	Description
x	x	x	x	x	0	x	x	Target position not reached (axis is stopped)
x	x	x	x	x	1	x	x	Target position reached (axis velocity = 0)
x	x	x	x	0	x	x	x	There is no internal limitation
x	x	x	x	1	x	x	x	There is an internal limitation The type of limitation depends on the operating mode.

0x8100-03 - Error code

Index-Sub	Type	RW	Default	Value range	Unit	Description
0x8100-03	U16	R	0	0 … 65535		Error code
'Explanation of the elements'...page 107						

This object shows the most recent error code, which has occurred in the System SLIO motion module. A group message can be obtained from bit 3 in *'0x8100-02 - Status word'...page 118*. There are the following error messages:

Error

Code	Description
0x3210	Power section supply overvoltage *'0x8680-07 - Power section supply voltage max. error level'...page 135*
0x3220	Power section supply reduced voltage *'0x8680-12 - Control voltage power stage min. error level'...page 136* *'0x8680-06 - Power section supply voltage min. error level'...page 135*
0x4310	Temperature µ-Controller exceeded *'0x8780-04 - Temperature µ-Controller error level'...page 137*
0x5115	Control voltage power stage exceeds the range of values *'0x8680-12 - Control voltage power stage min. error level'...page 136* *'0x8680-13 - Control voltage power stage max. error level'...page 136*
0xF010	System communication timeout *'0x6100-10 - System message timeout maximum'...page 112*
0xF011	Command output disable (BASP) is active.
0xF020	The selected Operation mode is not supported. *'0x8280-01 - Operating mode requested'...page 125*
0xF030	The power stage reports an interrupt via I/Ox. *'0x8E00-14 - Pulse train Alarm digital input I/O1…I/O4'...page 141*
0xF080	There is an internal error - please contact our support!

0x8100-04 - Limit active bits

Index-Sub	Type	RW	Default	Value range	Unit	Description
0x8100-04	U32	R	0	0 … 0xFFFFFFFF		Limit active bits

0: de-activated, 1: activated

- Bit 3 ... 0: reserved
- Bit 4: Limit velocity
  - *'0x8500-03 - Velocity control target value'...page 133* > *'0x8500-04 - Velocity control limit positive direction'...page 133*
  - *'0x8500-03 - Velocity control target value'...page 133* < *'0x8500-05 - Velocity control limit negative direction'...page 133*
- Bit 7 ... 5: reserved
- Bit 8: Location of the set point position
  - 0: Position is out of the permissible limits
  - 1: Position is within the permissible limits
  - *'0x8400-02 - Positioning profile target position'...page 129* > *'0x8480-05 - Software position limit positive direction'...page 130*
  - *'0x8400-02 - Positioning profile target position'...page 129* < *'0x8480-06 - Software position limit negative direction'...page 131*
  - *'0x8480-03 - Target position'...page 130* > *'0x8480-05 - Software position limit positive direction'...page 130*
  - *'0x8480-03 - Target position'...page 130* < *'0x8480-06 - Software position limit negative direction'...page 131*
- Bit 9: Location of the current position
  - 0: Position is out of the permissible limits
  - 1: Position is within the permissible limits
  - *'0x8480-02 - Position actual value'...page 130* > *'0x8480-05 - Software position limit positive direction'...page 130*
  - *'0x8480-02 - Position actual value'...page 130* < *'0x8480-06 - Software position limit negative direction'...page 131*
- Bit 31 ... 10: reserved

'Explanation of the elements'...page 107

0x8100-05 - Warnings active bits

Index-Sub	Type	RW	Default	Value range	Unit	Description
0x8100-05	U32	R	0	0 … 0xFFFFFFFF		Warnings active bits

0: de-activated, 1: activated

- Bit 11...0: reserved
- Bit 12: Temperature warning µ-Controller
  - *'0x8780-02 - Temperature µ-Controller actual value'...page 137* **>** *'0x8780-03 - Temperature µ-Controller warning level'...page 137*
- Bit 15 ... 13: reserved
- Bit 16: Warning under-voltage U_{IN} $24V_{DC}$
  - *'0x8680-02 - Power section supply voltage actual value'...page 135* **<** *'0x8680-04 - Power section supply voltage min. warning level'...page 135*
- Bit 17: Warning over-voltage U_{IN} $24V_{DC}$
  - *'0x8680-02 - Power section supply voltage actual value'...page 135* **>** *'0x8680-05 - Power section supply voltage max. warning level'...page 135*
- Bit 18: Warning under-voltage triggering power stage motion module
  - *'0x8680-08 - Control voltage power stage actual value'...page 136* **<** *'0x8680-10 - Control voltage power stage min. warning level'...page 136*
- Bit 19: Warning over-voltage triggering power stage motion module
  - *'0x8680-08 - Control voltage power stage actual value'...page 136* **>** *'0x8680-11 - Control voltage power stage max. warning level'...page 136*
- Bit 31 ... 20: reserved

'Explanation of the elements'...page 107

'Monitoring and error reaction'...page 95

0x8100-06 - Error active bits

Index-Sub	Type	RW	Default	Value range	Unit	Description
0x8100-06	U32	R	0	0 … 0xFFFFFFFF		Error active bits

0: de-activated, 1: activated

- Bit 11 ... 0: reserved
- Bit 12: Temperature error µ-controller [1)]
  - *'0x8780-02 - Temperature µ-Controller actual value'...page 137* > *'0x8780-04 - Temperature µ-Controller error level'...page 137*
- Bit 15 ... 13: reserved
- Bit 16: Under-voltage U error$_{IN}$ 24V$_{DC}$
  - *'0x8680-02 - Power section supply voltage actual value'...page 135* < *'0x8680-06 - Power section supply voltage min. error level'...page 135*
- Bit 17: Over-voltage U error$_{IN}$ 24V$_{DC}$
  - *'0x8680-02 - Power section supply voltage actual value'...page 135* > *'0x8680-07 - Power section supply voltage max. error level'...page 135*
- Bit 18: Under-voltage triggering power stage error motion module
  - *'0x8680-08 - Control voltage power stage actual value'...page 136* < *'0x8680-12 - Control voltage power stage min. error level'...page 136*
- Bit 19: Over-voltage triggering power stage error motion module
  - *'0x8680-08 - Control voltage power stage actual value'...page 136* > *'0x8680-13 - Control voltage power stage max. error level'...page 136*
- Bit 20: reserved
- Bit 21: Error power stage reports an interrupt via I/Ox.
  - *'0x8E00-14 - Pulse train Alarm digital input I/O1…I/O4'...page 141*
    '0x8E00-15 - Pulse train Alarm digital input active polarity I/O1…I/O4'...page 141
- Bit 22: Error system communication timeout [1)]
  - *'0x6100-10 - System message timeout maximum'...page 112*
- Bit 23: Error command output disable (BASP) active [1)]
- Bit 27 ... 24: reserved
- Bit 28: System error
  - There is an internal error - please contact our Yaskawa support!
- Bit 31...29: reserved

'Explanation of the elements'...page 107

[1)] Triggers an error reaction *'Monitoring and error reaction'...page 95*

5.2.8 Configure drive - 0x8180

0x8180-00 - Configure drive - number of entries

Index-Sub	Type	RW	Default	Value range	Unit	Description
0x8180-00	U08	R	3	3		Configure drive - number of entries

'Explanation of the elements'...page 107

0x8180-02 - Gear factor

Index-Sub	Type	RW	Default	Value range	Unit	Description
0x8180-02	U32	R/W	10000000	800000 … 16000000		Gear factor

'Explanation of the elements'...page 107

Gear factor for normalization of position, velocity and acceleration values. The value represents "units" in thousands with the rotary axis makes exactly one revolution. "Units" may thus be regarded as user units such as µm, mm, inch, degree angle and revolutions.

- Position
  - A to be traversed position thus results directly from the specified number of units.
- Velocity
  - The velocity is normalized to unit/s
- Acceleration and deceleration
  - Acceleration and deceleration are normalized to unit/s²

Example 1:

A motor directly drives a toothed disk. Via a toothed belt, a drilling machine is 1:1 coupled. It is to be used with a resolution of 0.0001 U (= 1 unit). In order to drive a speed of 900 U/min, therefore, a value of 150000 must be reported.

$$Units = \frac{1U/U}{0.0001U} = 10000\ 1/U$$

Gear factor = 10000 · 1000 = 10000000

Example 2:

A motor directly drives a spindle with a pitch of 20 mm/U. It is to be used with a resolution of 10µm (= 1 unit). In order to traverse a difference in position of 7000µm, 7000 can directly be specified (relative to the previous value).

$$Units = \frac{20mm/U}{10\mu m} = 20000\ 1/U$$

Gear factor = 20000 · 1000 = 20000000

5.2.9 Options - 0x8200

0x8200-00 - Options - number of entries

Index-Sub	Type	RW	Default	Value range	Unit	Description
0x8200-00	U08	R	5	5		Options - number of entries

'Explanation of the elements'...page 107

0x8200-01 - Configuration quick stop

Index-Sub	Type	RW	Default	Value range	Unit	Description
0x8200-01	S16	R/W**	2	-32768 … 32767		Configuration quick stop
'Explanation of the elements'...page 107						
'Brake control'...page 89						

The object contains the action to be used at a *Quick stop*.

Mode	Description
0	Instant state change to *'Switch on disabled'*
1	reserved
2	Break with quick stop deceleration 0x8580-03 and subsequent state change to *'Switch on disabled'*
4...	reserved

0x8200-05 - Configuration fault reaction

Index-Sub	Type	RW	Default	Value range	Unit	Description
0x8200-05	S16	R/W**	2	0 … 2		Configuration fault reaction
'Explanation of the elements'...page 107						

The object contains the action to be used on an error of the System SLIO motion module.

Mode	Description
0	Instant state change to *'Switch on disabled'*
1	reserved
2	Break with 0x8580-03 and subsequent state change to *'Switch on disabled'*

5.2.10 Operating modes - 0x8280

0x8280-00 - Operating mode - number of entries

Index-Sub	Type	RW	Default	Value range	Unit	Description
0x8280-00	U08	R	2	2		Operating mode - number of entries
'Explanation of the elements'...page 107						

0x8280-01 - Operating mode requested

Index-Sub	Type	RW	Default	Value range	Unit	Description
0x8280-01*	S16	R/W	0	-128 … 127		Operating mode requested
'Explanation of the elements'...page 107 *'Operating modes'...page 68*						

With the object 0x8280-01 the mode of the motor controller can be set. The following operating modes are supported:

Value	Description
0	No operating mode
1	*'PtP positioning profile'...page 73* ■ The *Homing mode* can be called during the operation, if you have previously set a homing method via *'0x8300-02 - Homing method'...page 126*. ■ A change to the *Velocity profile* is only possible if the state machine is in state *'Switch on disabled'*.
3	*'Velocity profile'...page 83*
4	reserved
6	*'Homing'...page 69*

0x8280-02 - Operating mode actual

Index-Sub	Type	RW	Default	Value range	Unit	Description
0x8280-02*	S16	R	0	-128 … 127		Operating mode actual
'Explanation of the elements'...page 107 *'Operating modes'...page 68*						

In object 0x8280-02 the current operating mode of the motor controller can be read. The following values are supported:

Value	Description
0	No operating mode selected
-1	Invalid operating mode or operating mode change
1	*'PtP positioning profile'...page 73*
3	*'Velocity profile'...page 83*
4	reserved
6	*'Homing'...page 69*

5.2.11 Homing - 0x8300

0x8300-00 - Homing - number of entries

Index-Sub	Type	RW	Default	Value range	Unit	Description
0x8300-00	U08	R	13	13		Homing - number of entries
'Explanation of the elements'...page 107 *'Homing'...page 69*						

0x8300-02 - Homing method

Index-Sub	Type	RW	Default	Value range	Unit	Description
0x8300-02	S08	R/W**	0	-128 … 127		Homing method
'Explanation of the elements'...page 107						

This object is used to select the homing method. Homing is an initialization drive of an axis, where the correct position is determined by means of an reference signal. For complete configuration of a homing run, all index 0x8300 associated objects are required.

Supported homing method

Mode	Description
17	It is referenced to a switch at the end of the position area (= homing switch). For the evaluation of the reference switch, a digital input of the System SLIO motion module is used. A pulse signal is expected.
37	The current position is used as reference position and the position value is reset to zero.

Please note that neither homing nor other operation modes of System SLIO motion module are monitored by limit switches, which cause a shut-down or stopping when reached. If you wish a surveillance and response, you have to ensure this through separate measures.

0x8300-03 - Homing digital input I/O1…I/O4

Index-Sub	Type	RW	Default	Value range	Unit	Description
0x8300-03	U08	R/W**	0	0 … 4		Homing digital input I/O1…I/O4
'Explanation of the elements'...page 107						

This object sets for homing *Mode 17* the digital input I /O1 ... I /O4 to which the homing switch is connected.

Enter here number:

- 0: inactive
- 1: Input of DIO1
- 2: Input of DIO2
- 3: Input of DIO3
- 4: Input of DIO4

0x8300-04 - Homing digital input active polarity I/O1…I/O4

Index-Sub	Type	RW	Default	Value range	Unit	Description
0x8300-04	U08	R/W**	1	0 … 1		Homing digital input active polarity I/O1…I/O4

'Explanation of the elements'...page 107

This object sets for homing *Mode 17* the polarity of the digital input I/O1...I/O4 of the System SLIO motion module. The internal logic of the System SLIO motion module evaluates a pulse signal from the reference switch. Please note in this case, the correct electrical connection!

Value	Description
0	The reference switch triggers a state change 1-0 at the end position.
1	The reference switch triggers a state change 0-1 at the end position.

0x8300-05 - Homing target position

Index-Sub	Type	RW	Default	Value range	Unit	Description
0x8300-05	S32	R/W**	0	-8388608 … 8388607	[user]	Homing target position

'Explanation of the elements'...page 107

This object defines the target position for the homing and is signed. If the homing and the mechanical structure are configured correctly, this position should not be reached during homing. It thus serves for:

- set a maximum traversing position, if the initial position is not reached
- to specify the traversing direction by the sign

0x8300-06 - Homing velocity V1

Index-Sub	Type	RW	Default	Value range	Unit	Description
0x8300-06	S32	R/W**	0	-8388608 … 8388607	[user]	Homing velocity V1

'Explanation of the elements'...page 107

This object specifies the search speed for traversing to the initial position. Homing *Mode 17* is a two step process.

1. With velocity V1 (0x8300-06) it is traversed toward the target position (0x8300-05) until the homing switch is overrun.
2. Then it is decelerated to speed 0 and again accelerated (0x8300-08 and 09) and moved in the negative direction at velocity V1.
3. If the reference switch is overrun again it is again slowed down and it is again accelerated in the positive direction at velocity V2 (0x8300-07).
4. With the third overrun of the homing switch the initial position is set and moved to.

0x8300-07 - Homing velocity V2

Index-Sub	Type	RW	Default	Value range	Unit	Description
0x8300-07	S32	R/W**	0	-8388608 … 8388607	[user]	Homing velocity V2
'Explanation of the elements'...page 107						

This object specifies the velocity V2 for traversing to the initial position. The velocity V2 (0x8300-07) is used in the final stage of homing when approaching the initial position.

0x8300-08 - Homing acceleration

Index-Sub	Type	RW	Default	Value range	Unit	Description
0x8300-08	S32	R/W**	1000	1000 … 10000000	[user]	Homing acceleration
'Explanation of the elements'...page 107						

This object specifies the value for the homing acceleration for traversing the initial position.

0x8300-09 - Homing deceleration

Index-Sub	Type	RW	Default	Value range	Unit	Description
0x8300-09	S32	R/W**	1000	1000 … 10000000	[user]	Homing deceleration
'Explanation of the elements'...page 107						

This object specifies the value for the homing deceleration for traversing the initial position.

0x8300-10 - Homing offset value

Index-Sub	Type	RW	Default	Value range	Unit	Description
0x8300-10	S32	R/W**	0	-8388608 … 8388607	[user]	Homing offset value
'Explanation of the elements'...page 107						

This object specifies the offset between the zero position of the application and the reference point (by homing determined) of the drive. The value is to specify with sign. If the homing is completed and the initial position is reached, the offset is added to the initial position.

5.2.12 Parameter for the PtP positioning profile - 0x8400

0x8400-00 - Positioning profile - number of entries

Index-Sub	Type	RW	Default	Value range	Unit	Description
0x8400-00	U08	R	5	5		Positioning profile - number of entries
'Explanation of the elements'...page 107						
'PtP positioning profile'...page 73						

0x8400-02 - Positioning profile target position

Index-Sub	Type	RW	Default	Value range	Unit	Description
0x8400-02*	S32	R/W**	0	-8388608 … 8388607	[user]	Positioning profile target position
'Explanation of the elements'...page 107						

For the "PtP positioning profile" in this object the new target position is to be specified in user units. *'0x8180-02 - Gear factor'...page 123* You can find this object in the I/O area and it should not be written via the *Acyclic channel*, since the value is overwritten with the next cycle. The positioning is active, if:

- the operation mode "PtP positioning profile" is selected
- the System SLIO motion module is in state *'Operation enabled'*

The positioning must not be started specifically by *'0x8100-01 - Control word'...page 117*. During an ongoing positioning or after reaching the target position 0x8400-02 can be changed and it starts positioning to the new target value. For complete configuration of a positioning and to execute other objects of the index group 0x8400 are required.

0x8400-03 - Positioning profile target velocity

Index-Sub	Type	RW	Default	Value range	Unit	Description
0x8400-03*	S32	R/W**	0	-8388608 … 8388607	[user]	Positioning profile target velocity
'Explanation of the elements'...page 107						

With *'PtP positioning profile'...page 73* this object specifies the speed for traversing to the initial position and is processed as absolute value. With *'Velocity profile'...page 83* the sign determines the direction of rotation. You can find this object in the I/O area and it should not be written via the *Acyclic channel*, since the value is overwritten with the next cycle. During a running positioning 0x8400-03 can be changed. It is directly accelerated or decelerated, provided the remaining room allows the positioning to the new target value.

0x8400-04 - Positioning profile target acceleration

Index-Sub	Type	RW	Default	Value range	Unit	Description
0x8400-04*	S32	R/W**	10000	300 … 100000000	[user]	Positioning profile target acceleration
'Explanation of the elements'...page 107						

This object specifies the acceleration for traversing to the initial position and is processed as absolute value. You can find this object in the I/O area and it should not be written via the *Acyclic channel*, since the value is overwritten with the next cycle. During a running positioning 0x8400-04 can be changed and is immediately active.

0x8400-05 - Positioning profile target deceleration

Index-Sub	Type	RW	Default	Value range	Unit	Description
0x8400-05*	S32	R/W**	10000	300 … 100000000	[user]	Positioning profile target deceleration
'Explanation of the elements'...page 107						

This object specifies the deceleration for traversing to the initial position and is processed as absolute value. You can find this object in the I/O area and it should not be written via the *Acyclic channel*, since the value is overwritten with the next cycle. During a running positioning 0x8400-05 can be changed and is immediately active.

5.2.13 Positions and limit values - 0x8480

0x8480-00 - Positions and limits - number of entries

Index-Sub	Type	RW	Default	Value range	Unit	Description
0x8480-00	U08	R	16	16		Positions and limits - number of entries
'Explanation of the elements'...page 107						

0x8480-02 - Position actual value

Index-Sub	Type	RW	Default	Value range	Unit	Description
0x8480-02*	S32	R	0	-8388608 … 8388607	[user]	Position actual value
'Explanation of the elements'...page 107						

This object specifies the value of the actual position. It also can be found in the input area *'In-/Output area'...page 90*. In open-loop operation, the object has an internally calculated value, not the current encoder value.

0x8480-03 - Target position

Index-Sub	Type	RW	Default	Value range	Unit	Description
0x8480-03	S32	R	0	-8388608 … 8388607	[user]	Target position
'Explanation of the elements'...page 107						

This object specifies the internal value of the target position at the input of the position controller. It is generated by the superior modules (e.g. PtP ramp generator).

0x8480-05 - Software position limit positive direction

Index-Sub	Type	RW	Default	Value range	Unit	Description
0x8480-05	S32	R/W**	8388607	-8388608 … 8388607	[user]	Software position limit positive direction
'Explanation of the elements'...page 107						

This object indicates the positive limit for the target position. Each target position is checked against this limit. Before matching always the reference offset *'0x8300-10 - Homing offset value'...page 128* is subtracted.

- Is a specified target position above the positive limit:
  - the positioning process is not performed
  - Bit 11: "Internal limitation active" in *'0x8100-02 - Status word'...page 118* is set
  - Bit 10: "Target position" reached in *'0x8100-02 - Status word'...page 118* is **not** set
  - Bit 9: in *'0x8100-04 - Limit active bits'...page 120* is set
- Is a measured actual position above the positive limit:
  - Bit 8: in *'0x8100-04 - Limit active bits'...page 120* is set

0x8480-06 - Software position limit negative direction

Index-Sub	Type	RW	Default	Value range	Unit	Description
0x8480-06	S32	R/W**	-8388608	-8388608 … 8388607	[user]	Software position limit negative direction

'Explanation of the elements'...page 107

This object indicates the negative limit for the target position. Each target position is checked against this limit. Before matching always the reference offset 0x8300-10 is subtracted.

- Is a specified target position below the negative limit:
  - the positioning process is not performed
  - Bit 11: "Internal limitation active" in *'0x8100-02 - Status word'...page 118* is set
  - Bit 10: "Target position" reached in *'0x8100-02 - Status word'...page 118* is **not** set
  - Bit 9: in *'0x8100-04 - Limit active bits'...page 120* is set
- Is a measured actual position below the negative limit:
  - Bit 8: in *'0x8100-04 - Limit active bits'...page 120* is set

0x8480-07 - Range limit positive direction

Index-Sub	Type	RW	Default	Value range	Unit	Description
0x8480-07	S32	R/W	8000000	10000 … 8388607	[user]	Range limit positive direction

'Explanation of the elements'...page 107

This object defines the positive overflow limit for the processing of position values. When this value is exceeded, the position values are set to *'0x8480-08 - Range limit negative direction'...page 131*. Together with the object 0x8480-07 you can define a position range. For example, by presetting *'0x8480-05 - Software position limit positive direction'...page 130* and *'0x8480-06 - Software position limit negative direction'...page 131* out of the range you will get an endless movement, since the software limits can never be reached during the movement.

0x8480-08 - Range limit negative direction

Index-Sub	Type	RW	Default	Value range	Unit	Description
0x8480-08	S32	R/W	-8000000	-8388608 … -10000	[user]	Range limit negative direction

'Explanation of the elements'...page 107

This object defines the negative overflow limit for the processing of position values. When this value is exceeded, the position values are set to *'0x8480-07 - Range limit positive direction'...page 131*. Together with the object 0x8480-08 you can define a position range. For example, by presetting *'0x8480-05 - Software position limit positive direction'...page 130* and *'0x8480-06 - Software position limit negative direction'...page 131* out of the range you will get an endless movement, since the software limits can never be reached during the movement.

0x8480-09 - In-position window

Index-Sub	Type	RW	Default	Value range	Unit	Description
0x8480-09	S32	R/W**	10	-8388608 … 8388607	[user]	In-position window
'Explanation of the elements'...page 107						

This object specifies with relation to the target position a symmetrical range, within which the target position is reached. With 0 the In-position window is disabled.

0x8480-10 - Lag error

Index-Sub	Type	RW	Default	Value range	Unit	Description
0x8480-10*	S32	R	0	-8388608 … 8388607	[user]	Lag error
'Explanation of the elements'...page 107						

This object contains the current system deviation as a deviation between target position and current value. This deviation is called *Lag error*. You can find this object in the I/O area.

5.2.14 Velocities and limit values - 0x8500

0x8500-00 - Velocity - number of entries

Index-Sub	Type	RW	Default	Value range	Unit	Description
0x8500-00	U08	R	13	13		Velocity - number of entries
'Explanation of the elements'...page 107						

0x8500-01 - Velocity control configuration

Index-Sub	Type	RW	Default	Value range	Unit	Description
0x8500-01	U32	R/W	0	0 … 0xFFFFFFFF		Velocity control configuration
'Explanation of the elements'...page 107						

With this object, you can disable the PtP position profile respectively the velocity profile for the velocity control. Here, the target velocity setting happens by the following objects:

- 0: Velocity control via PtP position profile and velocity profile with set point velocity setting via *'0x8400-03 - Positioning profile target velocity'...page 129*. This is the default setting.
- 1: Velocity control exclusively velocity profile with set point velocity setting via *'0x8500-03 - Velocity control target value'...page 133*.
- 2: PtP position profile and velocity profile are disabled with set point velocity setting as set point frequency for the PWM stage.

0x8500-02 - Velocity control actual value

Index-Sub	Type	RW	Default	Value range	Unit	Description
0x8500-02*	S32	R	0	-10000000 … 10000000	[user]	Velocity control actual value
'Explanation of the elements'...page 107						

This object specifies the value of the actual velocity. It also can be found in the input area *'In-/Output area'...page 90*. In open loop operation, the object has an internally calculated value, not determined from the current encoder value.

0x8500-03 - Velocity control target value

Index-Sub	Type	RW	Default	Value range	Unit	Description
0x8500-03	S32	R/W**	0	-10000000 … 10000000	[user]	Velocity control target value
'Explanation of the elements'...page 107						

This object specifies the internal value of the target velocity at the input of the velocity controller. It is generated by the superior modules (e.g. PtP ramp generator).

0x8500-04 - Velocity control limit positive direction

Index-Sub	Type	RW	Default	Value range	Unit	Description
0x8500-04	S32	R/W**	100000	0 … 10000000	[user]	Velocity control limit positive direction
'Explanation of the elements'...page 107						

This object indicates the positive limit for velocity. Each target velocity is checked against this limit.

0x8500-05 - Velocity control limit negative direction

Index-Sub	Type	RW	Default	Value range	Unit	Description
0x8500-05	S32	R/W**	-100000	-10000000 … 0	[user]	Velocity control limit negative direction
'Explanation of the elements'...page 107						

This object indicates the negative limit for velocity. Each target velocity is checked against this limit.

5.2.15 Acceleration and deceleration - 0x8580

0x8580-00 - Acceleration and deceleration - number entries

Index-Sub	Type	RW	Default	Value range	Unit	Description
0x8580-00	U08	R	6	6		Acceleration and deceleration - number entries
'Explanation of the elements'...page 107						

0x8580-02 - Acceleration/Deceleration actual value

Index-Sub	Type	RW	Default	Value range	Unit	Description
0x8580-02*	S32	R	0	-100000000 … 100000000	[user]	Acceleration/Deceleration actual value
'Explanation of the elements'...page 107						

This object specifies the value of the actual acceleration (positive sign) respectively deceleration (negative sign). It also can be found in the input area *'In-/Output area'...page 90*. In open loop operation, the object has an internally calculated value, not determined from the current encoder value.

0x8580-03 - Deceleration quick stop value

Index-Sub	Type	RW	Default	Value range	Unit	Description
0x8580-03	S32	R/W**	10000	10 … 100000000	[user]	Deceleration quick stop value
'Explanation of the elements'...page 107						

This object specifies the value of the target deceleration in case of a *quick stop*.

0x8580-04 - Acceleration limit

Index-Sub	Type	RW	Default	Value range	Unit	Description
0x8580-04	S32	R/W**	100000	10 … 100000000	[user]	Acceleration limit
'Explanation of the elements'...page 107						

This object indicates the bidirectional limit value for the set point acceleration value. Each set point acceleration value is checked against this limit value. Please note that the lower limit is unequal 0. As soon as a set point velocity value is active, the movement starts, although the set point acceleration is 0.

0x8580-06 - Deceleration limit

Index-Sub	Type	RW	Default	Value range	Unit	Description
0x8580-06	S32	R/W**	100000	10 … 100000000	[user]	Deceleration limit
'Explanation of the elements'...page 107						

This object indicates the bidirectional limit value for the set point deceleration value. Each set point deceleration value is checked against this limit value. Please note that the lower limit is unequal 0. As soon as a set point velocity value is active, the movement starts, although the set point deceleration is 0.

5.2.16 Voltages - 0x8680

0x8680-00 - Voltages - number of entries

Index-Sub	Type	RW	Default	Value range	Unit	Description
0x8680-00	U08	R	7	7		Voltages - number of entries
'Explanation of the elements'...page 107						

0x8680-02 - Power section supply voltage actual value

Index-Sub	Type	RW	Default	Value range	Unit	Description
0x8680-02	U16	R	0	0 … 6000	[0.01V]	Power section supply voltage actual value
'Explanation of the elements'...page 107						

This object specifies the level of the actual supply voltage.

0x8680-04 - Power section supply voltage min. warning level

Index-Sub	Type	RW	Default	Value range	Unit	Description
0x8680-04	U16	R/W	4100	0 … 6000	[0.01V]	Power section supply voltage min. warning level
'Explanation of the elements'...page 107						

This object specifies a lower limit for the supply voltage of the module. If the limit is exceeded, via *'0x8100-02 - Status word'...page 118* respectively *'0x8100-05 - Warnings active bits'...page 121* a warning is shown.

0x8680-05 - Power section supply voltage max. warning level

Index-Sub	Type	RW	Default	Value range	Unit	Description
0x8680-05	U16	R/W	5500	0 … 6000	[0.01V]	Power section supply voltage max. warning level
'Explanation of the elements'...page 107						

This object specifies an upper limit for the supply voltage of the module. If the limit is exceeded, via *'0x8100-02 - Status word'...page 118* respectively *'0x8100-05 - Warnings active bits'...page 121* a warning is shown.

0x8680-06 - Power section supply voltage min. error level

Index-Sub	Type	RW	Default	Value range	Unit	Description
0x8680-06	U16	R/W	3800	0 … 6000	[0.01V]	Power section supply voltage min. error level
'Explanation of the elements'...page 107						

This object specifies a lower limit for the supply voltage of the module. If the limit is undershot, via *'0x8100-02 - Status word'...page 118* respectively *'0x8100-06 - Error active bits'...page 122* an error is shown.

0x8680-07 - Power section supply voltage max. error level

Index-Sub	Type	RW	Default	Value range	Unit	Description
0x8680-07	U16	R/W	5800	0 … 6000	[0.01V]	Power section supply voltage max. error level
'Explanation of the elements'...page 107						

This object specifies an upper limit for the supply voltage of the module. If the limit is exceeded, via *'0x8100-02 - Status word'...page 118* respectively *'0x8100-06 - Error active bits'...page 122* an error is shown.

0x8680-08 - Control voltage power stage actual value

Index-Sub	Type	RW	Default	Value range	Unit	Description
0x8680-08	U16	R	0	0 … 4000	[0.01V]	Control voltage power stage actual value
'Explanation of the elements'...page 107						

This object specifies the level of the actual supply voltage of the power stage.

0x8680-10 - Control voltage power stage min. warning level

Index-Sub	Type	RW	Default	Value range	Unit	Description
0x8680-10	U16	R/W	850	0 … 4000	[0.01V]	Control voltage power stage min. warning level
'Explanation of the elements'...page 107						

This object specifies a lower limit for the control voltage of the power stage. If the limit is exceeded, via *'0x8100-02 - Status word'...page 118* respectively *'0x8100-05 - Warnings active bits'...page 121* a warning is shown.

0x8680-11 - Control voltage power stage max. warning level

Index-Sub	Type	RW	Default	Value range	Unit	Description
0x8680-11	U16	R/W	1200	0 … 4000	[0.01V]	Control voltage power stage max. warning level
'Explanation of the elements'...page 107						

This object specifies an upper limit for the control voltage of the power stage. If the limit is exceeded, via *'0x8100-02 - Status word'...page 118* respectively *'0x8100-05 - Warnings active bits'...page 121* a warning is shown.

0x8680-12 - Control voltage power stage min. error level

Index-Sub	Type	RW	Default	Value range	Unit	Description
0x8680-12	U16	R/W	800	0 … 4000	[0.01V]	Control voltage power stage min. error level
'Explanation of the elements'...page 107						

This object specifies a lower limit for the control voltage of the power stage. If the limit is undershot, via *'0x8100-02 - Status word'...page 118* respectively *'0x8100-06 - Error active bits'...page 122* an error is shown.

0x8680-13 - Control voltage power stage max. error level

Index-Sub	Type	RW	Default	Value range	Unit	Description
0x8680-13	U16	R/W	1400	0 … 4000	[0.01V]	Control voltage power stage max. error level
'Explanation of the elements'...page 107						

This object specifies an upper limit for the control voltage of the power stage. If the limit is exceeded, via *'0x8100-02 - Status word'...page 118* respectively *'0x8100-06 - Error active bits'...page 122* an error is shown.

5.2.17 Temperatures - 0x8780

0x8780-00 - Temperatures - number of entries

Index-Sub	Type	RW	Default	Value range	Unit	Description
0x8780-00	U08	R	9	9		Temperatures - number of entries
'Explanation of the elements'...page 107						

0x8780-02 - Temperature µ-Controller actual value

Index-Sub	Type	RW	Default	Value range	Unit	Description
0x8780-02	S16	R	0	-50 … 120	[degC]	Temperature µ-Controller actual value
'Explanation of the elements'...page 107						

This object specifies the measured temperature of the µ-Controller of the motion module.

0x8780-03 - Temperature µ-Controller warning level

Index-Sub	Type	RW	Default	Value range	Unit	Description
0x8780-03	S16	R/W	90	-50 … 120	[degC]	Temperature µ-Controller warning level
'Explanation of the elements'...page 107						

This object specifies the temperature limit of the µ-Controller of the motion module. If the temperature limit is exceeded, via *'0x8100-02 - Status word'...page 118* respectively *'0x8100-05 - Warnings active bits'...page 121* a warning is shown.

0x8780-04 - Temperature µ-Controller error level

Index-Sub	Type	RW	Default	Value range	Unit	Description
0x8780-04	S16	R/W	105	-50 … 120	[degC]	Temperature µ-Controller error level
'Explanation of the elements'...page 107						

This object specifies the temperature limit of the µ-Controller of the motion module. If the limit is reached, via *'0x8100-02 - Status word'...page 118* respectively *'0x8100-06 - Error active bits'...page 122* an error is shown and the status of the motion module changes to *'Fault reaction active'*.

0x8780-05 - Temperature µ-Controller offset

Index-Sub	Type	RW	Default	Value range	Unit	Description
0x8780-05	S16	R/W	1173	900 … 1500		Temperature µ-Controller offset
'Explanation of the elements'...page 107						

This object specifies an offset for the temperature of the µ-Controller.

0x8780-06 - Temperature µ-Controller gain

Index-Sub	Type	RW	Default	Value range	Unit	Description
0x8780-06	S16	R/W	386	300 … 500		Temperature µ-Controller gain
'Explanation of the elements'...page 107						

This object specifies a gain for the temperature of the µ-Controller.

5.2.18 Pulse train parameter - 0x8E00

0x8E00-00 - Pulse train parameter - number of entries

Index-Sub	Type	RW	Default	Value range	Unit	Description
0x8E00-00	U08	R	15	15		Pulse train parameter - number of entries
'Explanation of the elements'...page 107						

0x8E00-01 - Pulse train configuration

Index-Sub	Type	RW	Default	Value range	Unit	Description
0x8E00-01	U32	R/W	3	0 … 3		Pulse train configuration
'Explanation of the elements'...page 107						

With this object, you can specify the frequency pulse patterns. There are the following possibilities:

Pulse and direction (P/D)

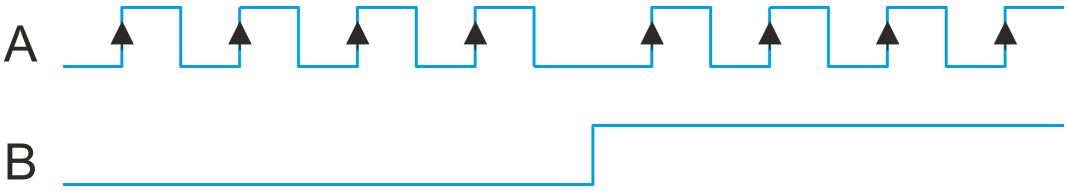

- 0x8E00-01 = 1
- The output of the frequency pattern happens by output A1 (P)
- The direction of rotation marks A2 (D) with "high" level for clockwise and "low" level for counter-clockwise rotation.

Frequency modulation (CW/CCW)

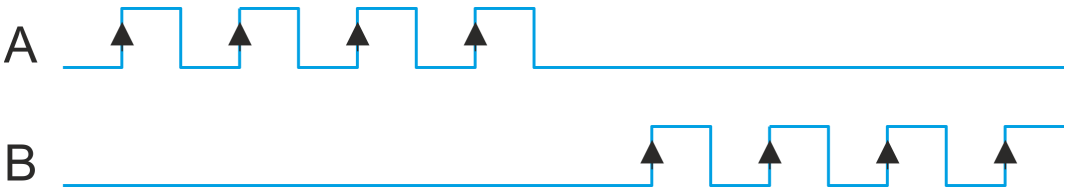

- 0x8E00-01 = 2
- With clockwise rotation the frequency signal is output at A1 (CW) respectively counter-clockwise rotation at A2 (CCW).
- The inactive channel is always at logic "low".

Incremental encoder simulation (A/B)

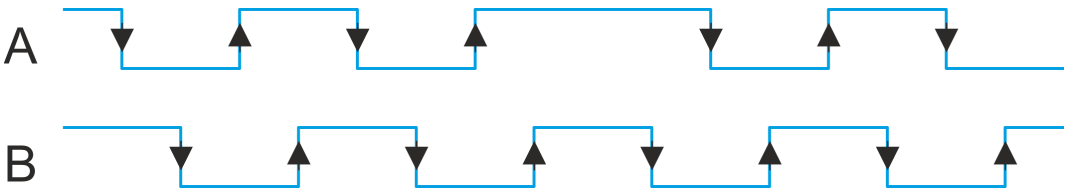

- 0x8E00-01 = 3
- Signal corresponds to the signal of an incremental encoder. By direct connection to a frequency converter synchronous axes in the master/slave structure can be realized.
- A1 (A) and A2 (B) output a phase-shifted by 90° signal.
- The shift from A1 to A2 is positive for clockwise rotation and negative for counter-clockwise rotation.

0x8E00-02 - Pulse train pulses per revolution

Index-Sub	Type	RW	Default	Value range	Unit	Description
0x8E00-02	U16	R/W	40000	100 … 65535	[pls]	Pulse train pulses per revolution
'Explanation of the elements'...page 107						

This object specifies the number of pulses per rotation of the connected power stage. Please regard that usually the same settings are to be made at the power stage.

0x8E00-03 - Pulse train set frequency

Index-Sub	Type	RW	Default	Value range	Unit	Description
0x8E00-03	S32	R/W	0	-5000000 … 5000000	[Hz]	Pulse train set frequency
'Explanation of the elements'...page 107						

This object indicates the current set point of the pulse frequency, which is output to the connected power stage. It is generated by the superior modules (e.g. PtP ramp generator).

0x8E00-04 - Pulse train max. frequency

Index-Sub	Type	RW	Default	Value range	Unit	Description
0x8E00-04	U32	R/W	5000000	0 … 5000000	[Hz]	Pulse train max. frequency
'Explanation of the elements'...page 107						

This object specifies the maximum pulse frequency which is output to the connected power stage.

5.2.18.1 0x8E00-08 ... 15 - Signals of the power stage

The System SLIO motion module can directly control power stage via digital signals. These signals are generated and evaluated directly from the internal state machine. They no longer need to be processed by the user program. Via subindices -08...15 you can assign these signals to a digital input respectively output.

0x8E00-08 - Pulse train Servo-On digital output I/O1…I/O4

Index-Sub	Type	RW	Default	Value range	Unit	Description
0x8E00-08	U08	R/W	0	0 … 4		Pulse train Servo-On digital output I/O1…I/O4
'Explanation of the elements'...page 107						

Returns in state *'Operation enabled'* this signal. The signal is used to enable the power stage for motor controlling. Here you have the following bit assignment:

- Bit 0: to set for de-activated
- Bit 1: to set for I/O1
- Bit 2: to set for I/O3
- Bit 3: to set for I/O2
- Bit 4: to set for I/O4

0x8E00-09 - Pulse train Servo-On digital output active polarity I/O1…I/O4

Index-Sub	Type	RW	Default	Value range	Unit	Description
0x8E00-09	U08	R/W	0	0 … 1		Pulse train Servo-On digital output active polarity I/O1…I/O4
'Explanation of the elements'...page 107						

Here you can specify the polarity for the output:

- 0: High level with activated DO
- 1: Low level with activated DO

0x8E00-10 - Pulse train Alarm-Reset digital output I/O1…I/O4

Index-Sub	Type	RW	Default	Value range	Unit	Description
0x8E00-10	U08	R/W	0	0 … 4		Pulse train Alarm-Reset digital output I/O1…I/O4
'Explanation of the elements'...page 107						

Returns in state *'Operation enabled'* this signal. The signal is used to reset pending alarms in the power stage. Here you have the following bit assignment:

- Bit 0: to set for de-activated
- Bit 1: to set for I/O1
- Bit 2: to set for I/O3
- Bit 3: to set for I/O2
- Bit 4: to set for I/O4

0x8E00-11 - Pulse train Alarm-Reset digital output active polarity I/O1…I/O4

Index-Sub	Type	RW	Default	Value range	Unit	Description
0x8E00-11	U08	R/W	0	0 … 1		Pulse train Alarm-Reset digital output active polarity I/O1…I/O4
'Explanation of the elements'...page 107						

Here you can specify the polarity for the output:

- 0: High level with activated DO
- 1: Low level with activated DO

0x8E00-12 - Pulse train In-Position digital input I/O1…I/O4

Index-Sub	Type	RW	Default	Value range	Unit	Description
0x8E00-12	U08	R/W	0	0 … 4		Pulse train In-Position digital input I/O1… I/O4

'Explanation of the elements'...page 107

This signal is expected as feedback from the power stage when it has completed the positioning. Here you have the following bit assignment:

- Bit 0: to set for de-activated
- Bit 1: to set for I/O1
- Bit 2: to set for I/O3
- Bit 3: to set for I/O2
- Bit 4: to set for I/O4

0x8E00-13 - Pulse train In-Position digital input active polarity I/O1…I/O4

Index-Sub	Type	RW	Default	Value range	Unit	Description
0x8E00-13	U08	R/W	0	0 … 1		Pulse train In-Position digital input active polarity I/O1…I/O4

'Explanation of the elements'...page 107

Here you can specify the polarity for the output:

- 0: High level with activated DI
- 1: Low level with activated DI

0x8E00-14 - Pulse train Alarm digital input I/O1…I/O4

Index-Sub	Type	RW	Default	Value range	Unit	Description
0x8E00-14	U08	R/W	0	0 … 4		Pulse train Alarm digital input I/O1…I/O4

'Explanation of the elements'...page 107

This signal is expected as feedback from the power stage when it has pending an alarm. Here you have the following bit assignment:

- Bit 0: to set for de-activated
- Bit 1: to set for I/O1
- Bit 2: to set for I/O3
- Bit 3: to set for I/O2
- Bit 4: to set for I/O4

0x8E00-15 - Pulse train Alarm digital input active polarity I/O1…I/O4

Index-Sub	Type	RW	Default	Value range	Unit	Description
0x8E00-15	U08	R/W	0	0 … 1		Pulse train Alarm digital input active polarity I/O1…I/O4

'Explanation of the elements'...page 107

Here you can specify the polarity for the output:

- 0: High level with activated DI
- 1: Low level with activated DI

5.2.19 Encoder resolution - 0x8F00

0x8F00-00 - Encoder - number of entries

Index-Sub	Type	RW	Default	Value range	Unit	Description
0x8F00-00	U08	R	3	3		Encoder - number of entries
'Explanation of the elements'...page 107						

0x8F00-01 - Encoder feedback configuration

Index-Sub	Type	RW	Default	Value range	Unit	Description
0x8F00-01	U32	R/W	0	0 … 1		Encoder feed-back configuration
'Explanation of the elements'...page 107						

This object activates the encoder inputs.

- 0: Encoder functionality is disabled. 0 is output at *'0x8F00-02 - Encoder actual value'...page 142*.
- 1: Encoder functionality is denabled. The current encoder value is output at *'0x8F00-02 - Encoder actual value'...page 142*.

  Encoder:
  - 24V HTL signal
  - Phase A and B
  - 100 kHz
  - 4-fold evaluation

0x8F00-02 - Encoder actual value

Index-Sub	Type	RW	Default	Value range	Unit	Description
0x8F00-02	U16	R	0	0 … 65535	[inc]	Encoder actual value
'Explanation of the elements'...page 107						

With this object you can get the actual value of a possibly connected encoder. Please note that this value is not further evaluated in the motion module. You can further process it in your user program.