DWG.NO. HW2380294

Type	Specification
YR-1-06VXSCP20-B00	Built-in Air Hoses and I/O (8 wires) and Ethernet Cables.

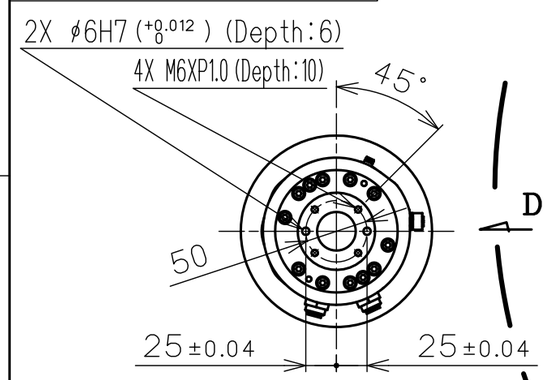

View C (Scale 1:5)

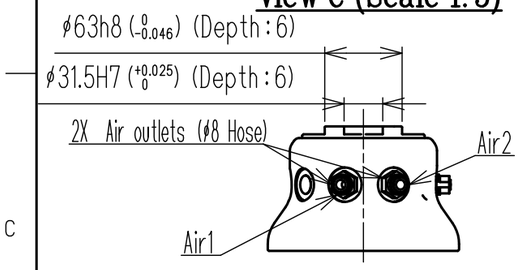

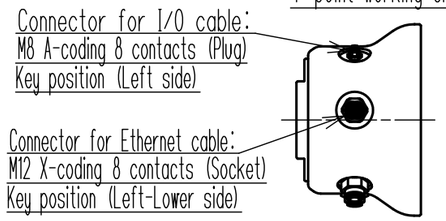

View D (Scale 1:5)

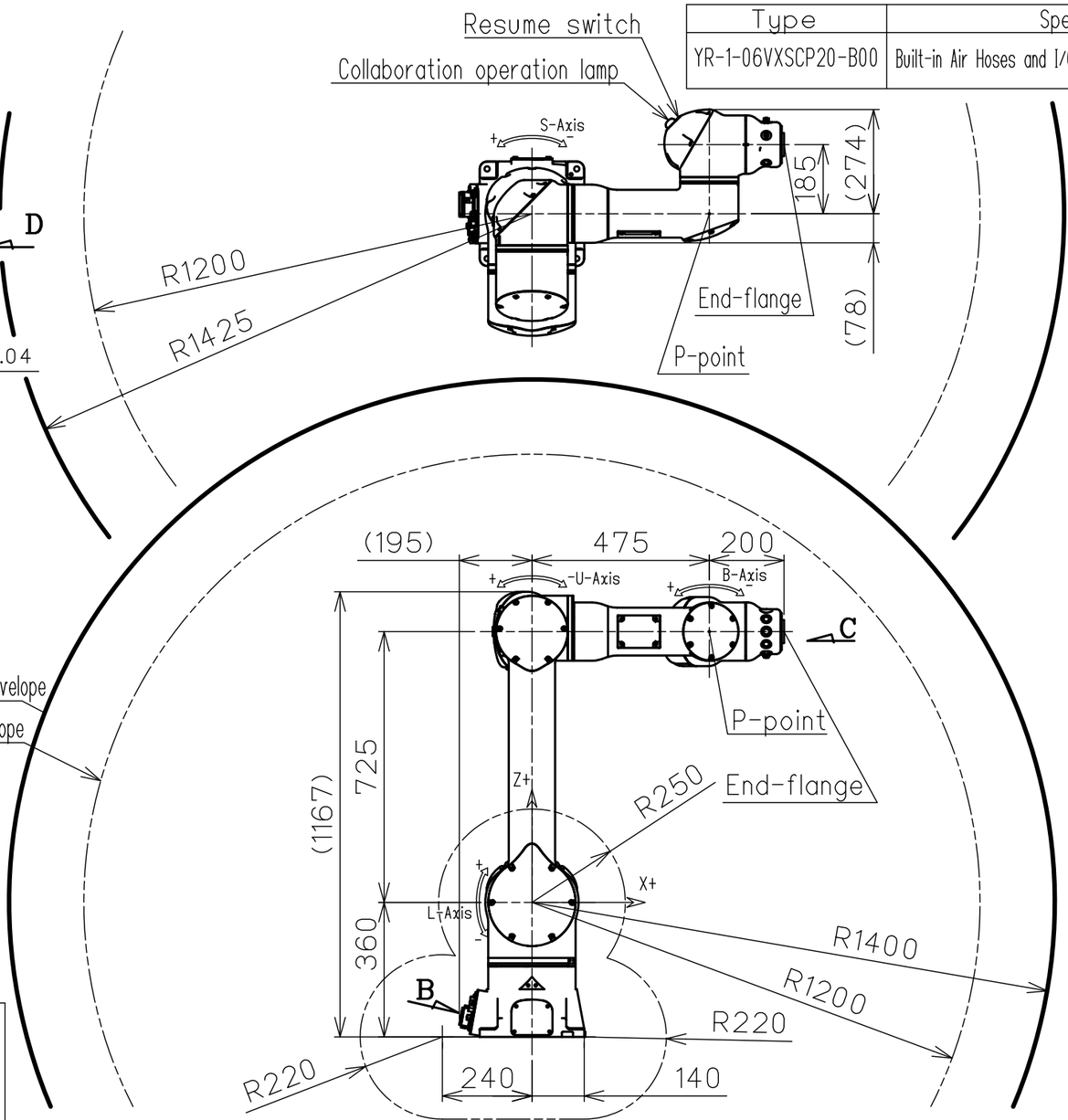

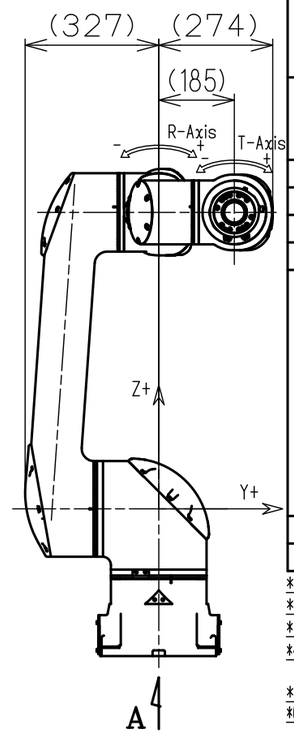

Item		Model: MOTOMAN-HC20SDTP
Configuration		Vertically Articulated
Degree of Freedom		6
Payload		20kg
Repeatability *1		0.05mm
Range of Motion	S-Axis (Turning)*3	-210° - +210°
	L-Axis (Lower Arm)	-180° - +180°
	U-Axis (Upper Arm)	-290° - +290°
	R-Axis (Roll)	-210° - +210°
	B-Axis (Pitch/Yaw)	-180° - +180°
	T-Axis (Twist)	-210° - +210°
Maximum Speed*4	S-Axis	1.83rad/s, 105°/s
	L-Axis	1.57rad/s, 90°/s
	U-Axis	2.35rad/s, 135°/s
	R-Axis	2.27rad/s, 130°/s
	B-Axis	3.14rad/s, 180°/s
	T-Axis	3.14rad/s, 180°/s
Allowable Moment	R-Axis	58.8N・m (6.0kgf・m)
	B-Axis	58.8N・m (6.0kgf・m)
	T-Axis	29.4N・m (3.0kgf・m)
Allowable Inertia ($GD^2/4$)	R-Axis	4.0 kg・m²
	B-Axis	4.0 kg・m²
	T-Axis	2.0 kg・m²
Mass		97kg
Protection Rating		IP67
Clean Rating (Reference)*5		Equivalent to ISO class 5
Mounting Method		Floor-, Wall-, Tilt-, Ceiling-mounted
Ambient conditions	Temperature	0 °C - 40 °C
	Humidity	20%RH - 80%RH (Non-Condensing)
	Vibration Acceleration	4.9m/s² (0.5G) or less
	Altitude	1000m or less
	Flatness for Installation	0.5mm or less
	Others	・Free from oil soot. ・Free from explosive and corrosive gas or liquid. ・Free from excessive electrical noise. ・Free from strong magnetic field.
Power Requirements *6		1.5kVA
Applicable Controller		YRC1000/YRC1000micro

*1 Repeatability conforms to ISO9283.
*2 The posture in this drawing is in the home position.
*3 When tilt- or wall-mounted, the S-axis motion range is limited.
*4 The maximum speed value in this table is the available maximum value and will vary depending on the load, posture, or range of motion.
*5 The clean rating is for reference and not guaranteed.
*6 The power requirement value is obtained using YASKAWA's in-house measurement conditions and will vary depending on the load, motion pattern, or cycle time.

Detail of connector for Ethernet cable

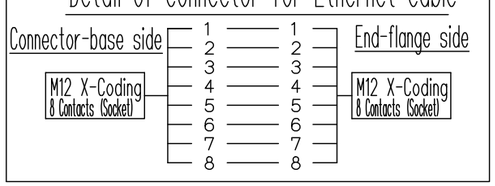

Detail of connector for I/O cable

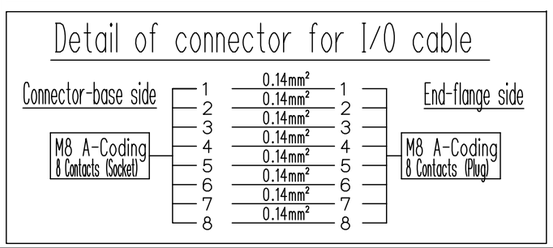

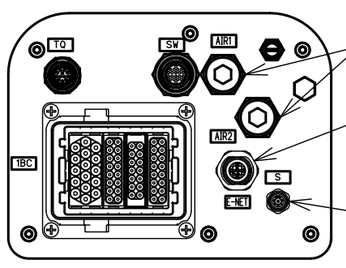

2X Rc3/8 (Air inlet) (Plug Attached)
Connector for Ethernet cable: M12 X-coding 8 contacts (Socket) Key position (Left-Lower side)
Connector for I/O cable: M8 A-coding 8 contacts (Socket) Key position (Upper side)

View B (Scale 1:3)

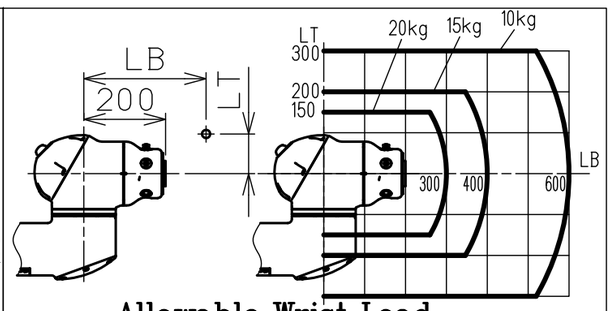

Allowable Wrist Load

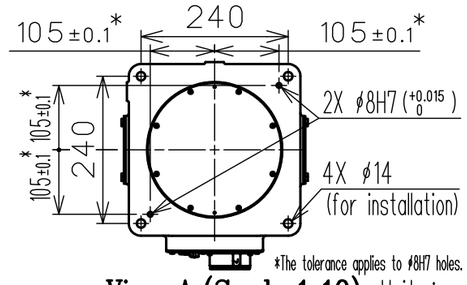

*The tolerance applies to ø8H7 holes.

View A (Scale 1:10) Units:mm

注記
1.本データの変更、転載を禁止いたします。
2.本データは、予告なしに、削除する場合がございます。
3.本データは仕様を保証するものではございません。
4.本データの使用によって発生した一切の損害についての責任は負いかねます。

営業用資料

SCALE 1 :15

YASKAWA 株式会社 安川電機

参考図

TITLE MOTOMAN-HC20SDTP Dust and Drip Proof Spec.
DIMENSION DIAGRAM

DRWN DATE '21.05.06
DWG.NO. HW2380295 ①

SIZE A3